BENTEC TOP DRIVE TD-350-HT

Bentec GmbH Drilling & Oilfield Systems Deilmannstraße 1, D-48455 Bad Bentheim Germany

Technical Bulletin Top Drive TD-500-HT Top Drive TD-350-HT

1 Introduction

The Bentec Top Drive is designed as transportable as well as permanent installed unit for deep drilling rigs with different mast types. The System is powered by an AC motor. The Top Drive is controlled by a separate control panel.

The standard Top Drive version includes the following items:

- Hanger assembly with integrated Counterbalance cylinders
- Standard washpipe
- Link-tilt-system with position monitoring designed for high impacts
- Remote-controlled and manual IBOP
- Backup Clamp to make up and break the Top Drive drill pipe connection
- Guide rail system inducing the torque within the mast.
- Electrical service loop
- Onboard hydraulic unit.

The blower rate for the motor cooling is variable and depends on the motor temperature.

The drives of the system have been carefully chosen to meet current noise protection regulations.

1.1 Overview

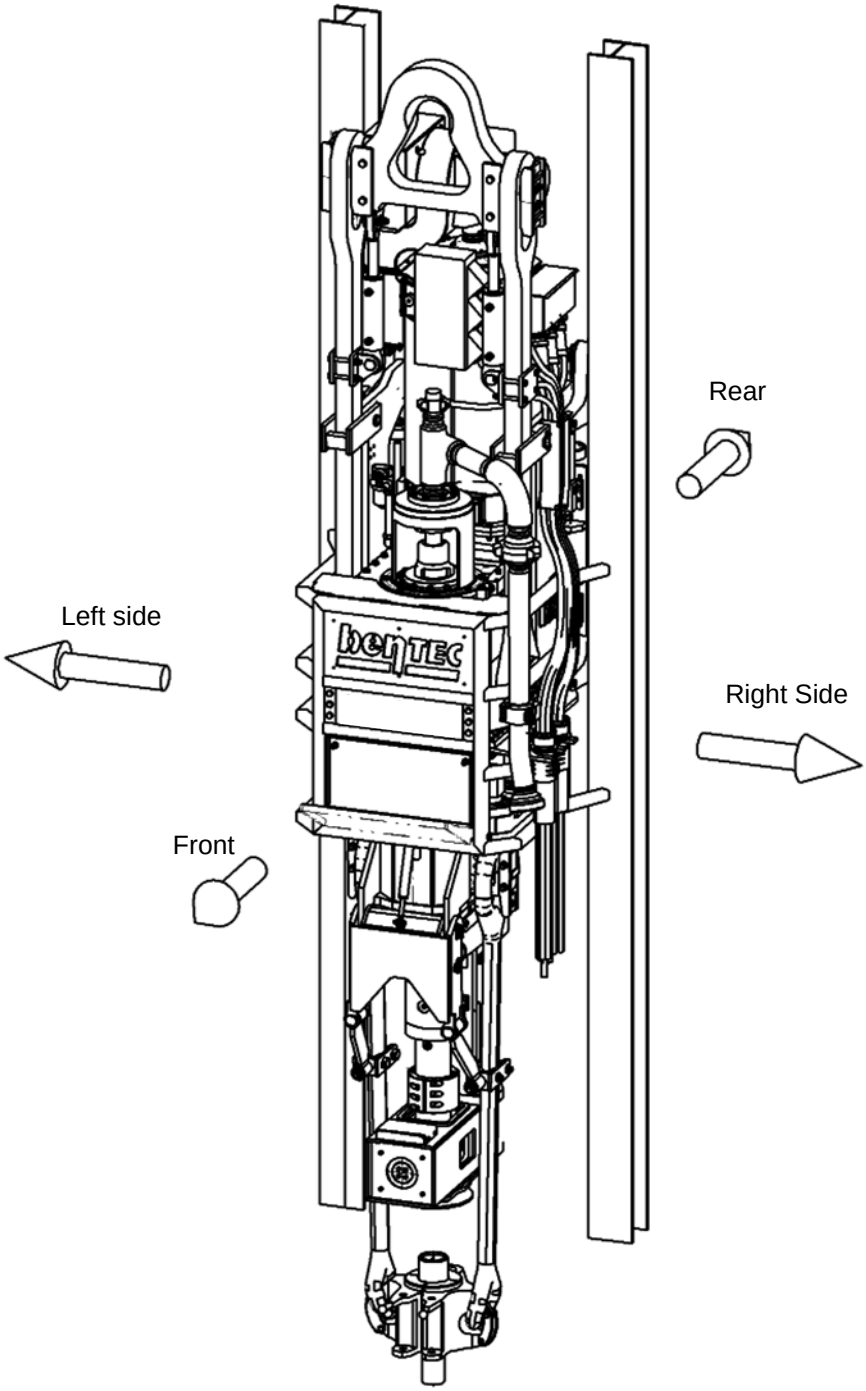

Abb. 1

2 Technical Data

2.1 Dimension drawing

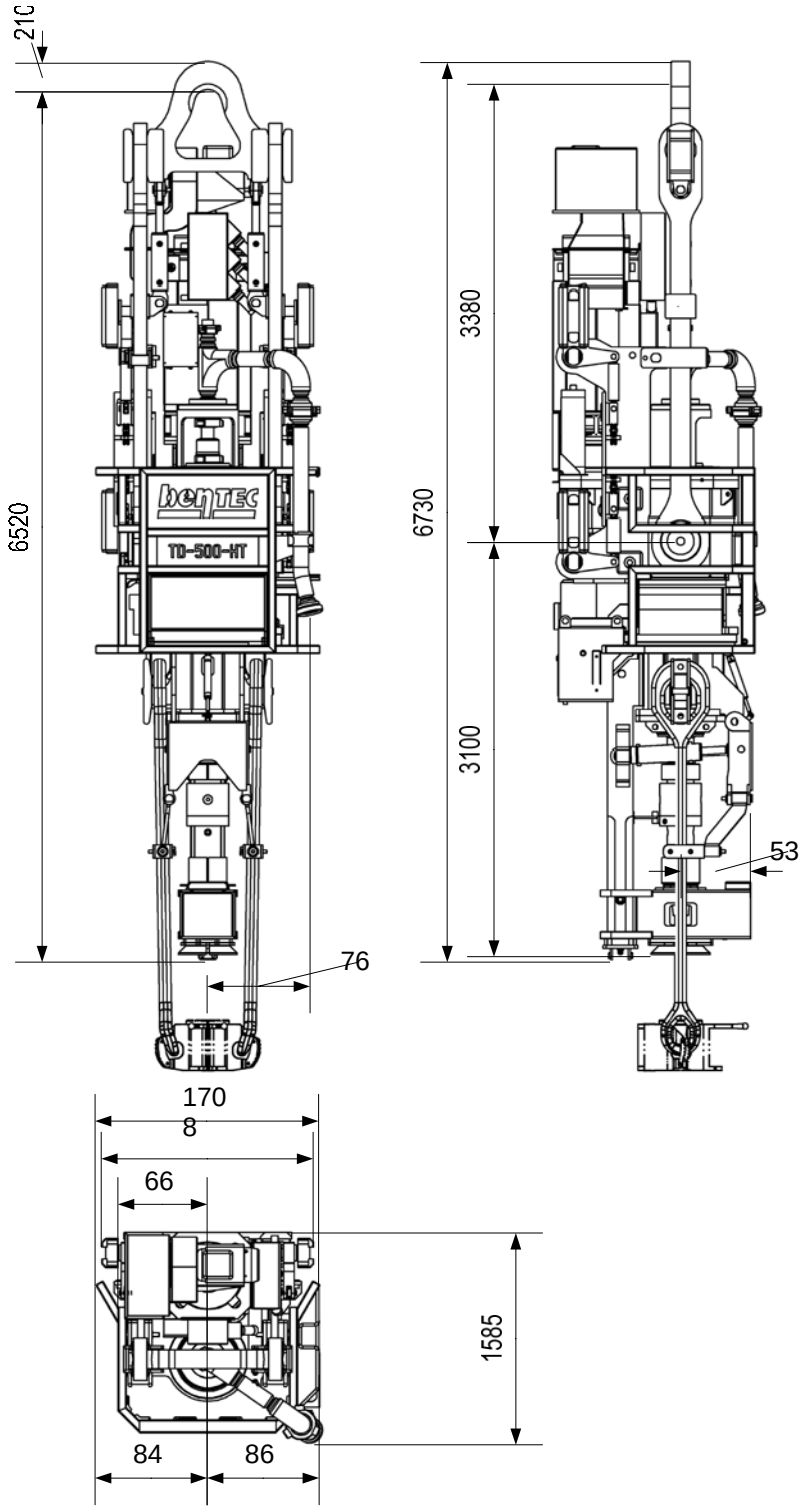

Abb. 2

2.2 General

Description	Value	Dimension
Weight	16200	kg
Length	6730	mm
Width	1780	mm
Height	1540	mm

2.3 Performance Data

Description	Value	Dimension
API Load Capacity (350t Top Drive)	350 3125	ton kN
API Load Capacity (500t Top Drive)	500 4480	ton kN
Pressure Rating	500 7500	bar PSI
Power Rating	758 1030	kW HP
Drill Speed	0 to 115/230	1 min^{-1}
Drilling Torque	63.000 46.500	Nm ft lbs
Make up / Break out Torque	100.000 73.760	Nm Ft lbs
Static Break Torque	105.000 77.440	Nm ft lbs
Link Tilt Lifting Capacity	2500 kg 5500 lbs	@1,4 m @4 ½ “
Gear box Ratio 1. Gear	14:1	

2.3.1 Torque Speed Diagram

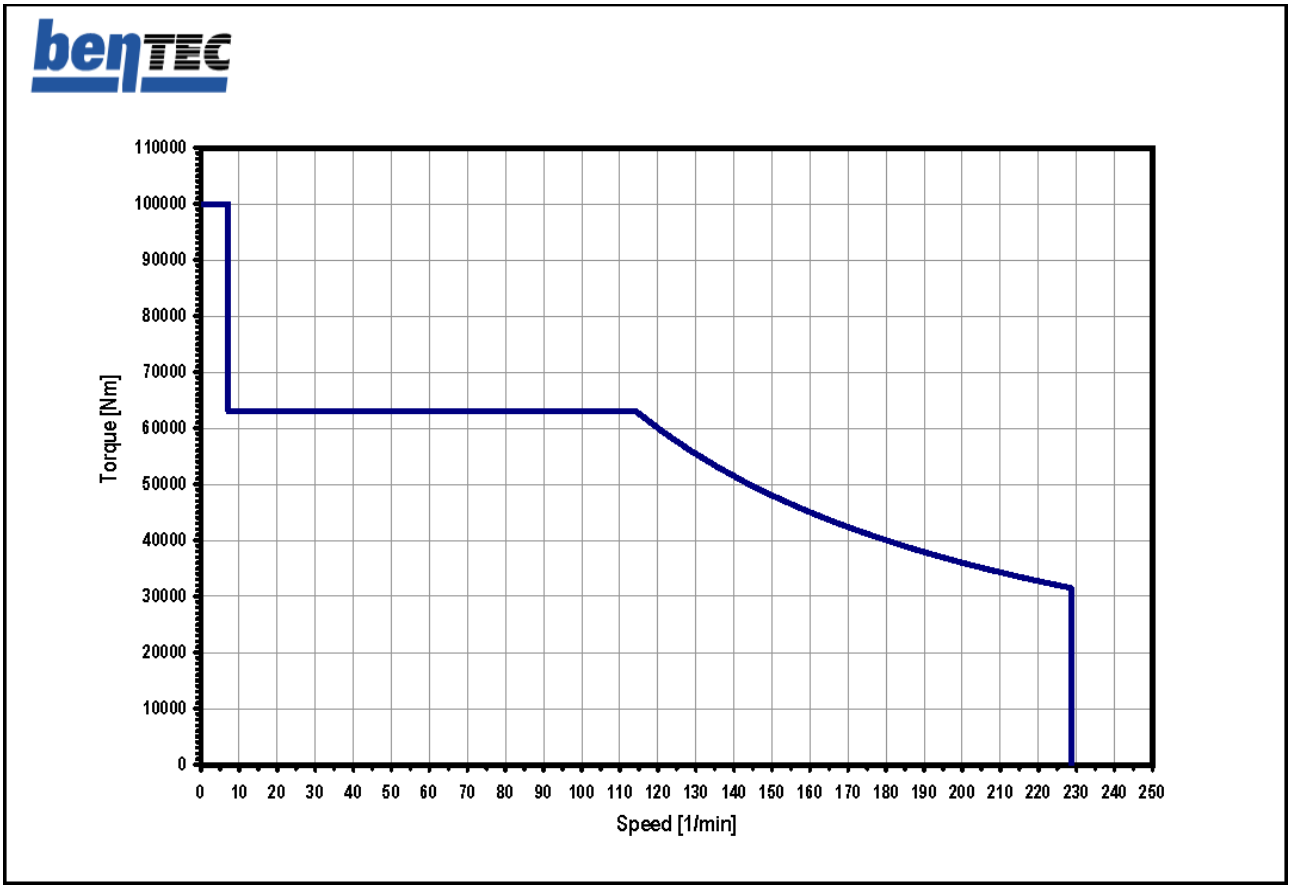

Abb. 3

2.4 Connection values

	Description	Value	Dimension
Main drive electric	Voltage	D 575	V AC
	Current load (max.)	880	A
	Power input (max.)	750	kW
Main drive cooling electric	**Description**	**Value**	**Dimension**
	Voltage	D 400 / S690	V AC
	Current load (max.)	14,3 / 8,3	A
	Power input (max.)	7,5	kW
Hydraulic Power Unit electric	**Description**	**Value**	**Dimension**
	Voltage	D 400 / S690	V AC
	Current load (max.)	14,3 / 8,3	A
	Power input (max.)	7,5	kW
Gearbox Lubrication electric	**Description**	**Value**	**Dimension**
	Voltage	D 400 / S690	V AC
	Current load (max.)	14,3 / 8,3	A
	Power input (max.)	7,5	kW

2.5 Operation conditions

	Description	Value	Dimension
Environment			

3 Setup and Function

3.1 Module description

The Machine is divided in subassemblies as follows:

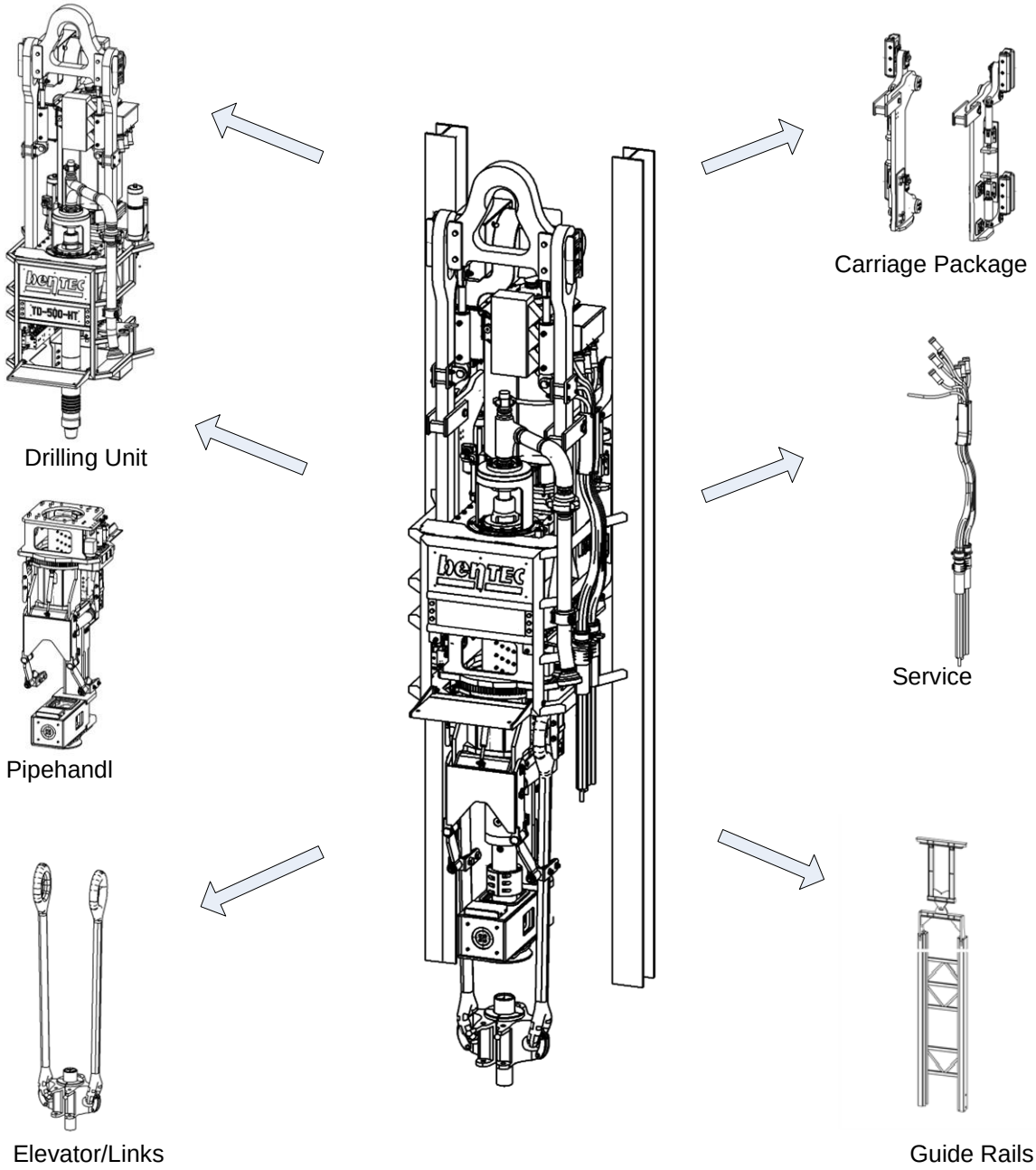

Abb. 4

3.1.1 Drilling Unit

The Drilling Unit consists of the following subassembly groups:

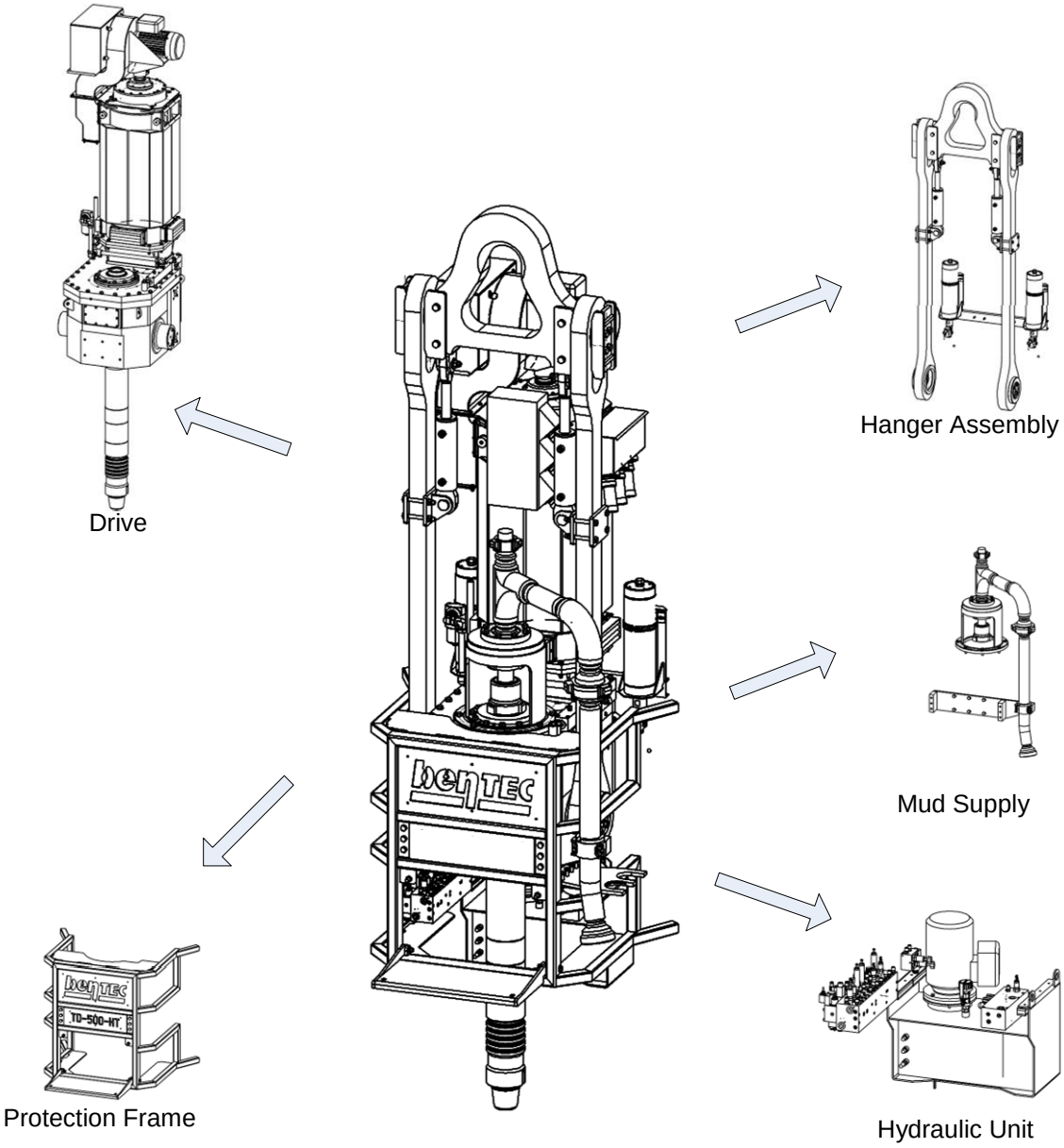

Abb. 5

3.1.1.1 Hanger Assembly

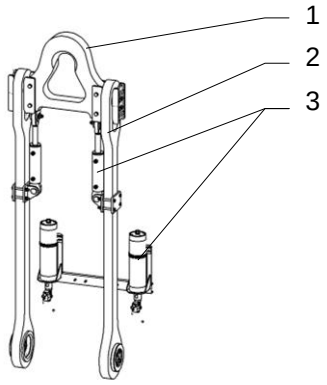

The Hanger Assembly consists of:

- Yoke (1)
- Two upper links (2)
- Counterbalance system (3).
  The counterbalance system (3) is integrated within the Upper Links and consists of:
  - two Hydraulic cylinders
  - two hydraulic accumulators

The cylinders are assembled between Yoke (1) and Upper Links (2). The Counterbalance System can compensate a maximum distance of 200 mm. When starting the operation the counterbalance system is charged by the hydraulic system. During operation the hydraulic system refills the counterbalance system to the adjusted pressure.

Abb. 6

3.1.1.2 Drive

Drive

The drive system contains of the following components:

1 Engine Cooling System
2 Brake
3 AC motor
4 Gearbox
5 Mainshaft

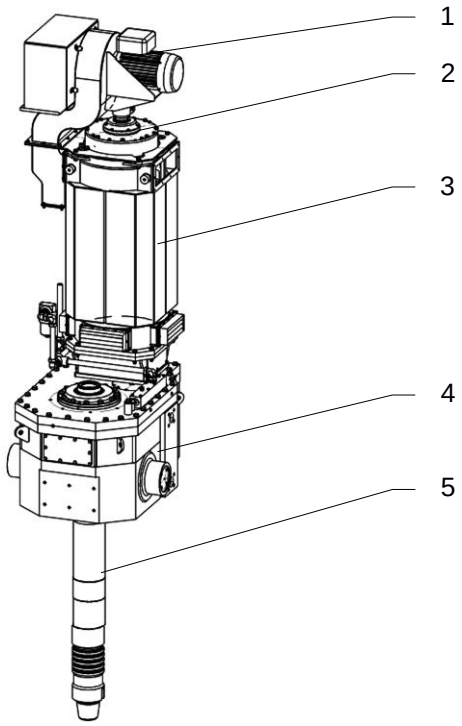

Abb. 7

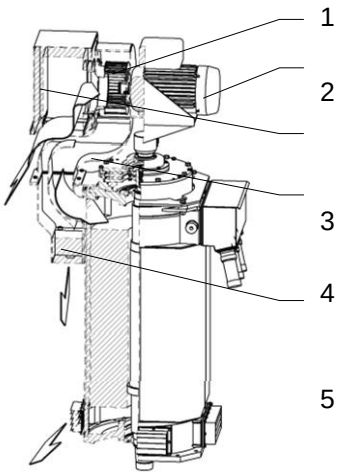

- Motor Cooling System
  A frequency controlled motor (2) drives the engine fan (1). The fan speed
  depends on the motor temperature which is determined by sensors. (COD)
  Cooling **o**n **D**emand. Cooling air is conducted via a noise reduced suction
  hood (3) through a blower channel (4) into the ac motor of the Top Drive and transmission oil cooler. (5).

Abb. 8

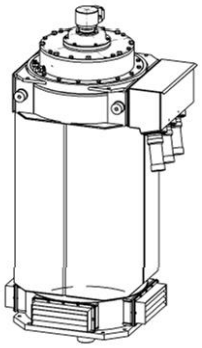

- AC Motor
  The rated power of the motor is 758 KW / 1030HP. It is controlled by a frequency drive and temperature monitored. The maximum operating temperature is controlled by sensors in the motor.

Abb. 9

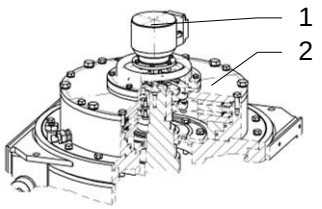

- Rotary encoder(1)
  The rotary encoder is assembled to the holing brake and - via shaft extension
  - directly connected to the engine shaft
- Brake (2)
  The disc brake is hydraulic closed and spring force opened. It can absorb a torque of 105.000 Nm.

Abb. 10

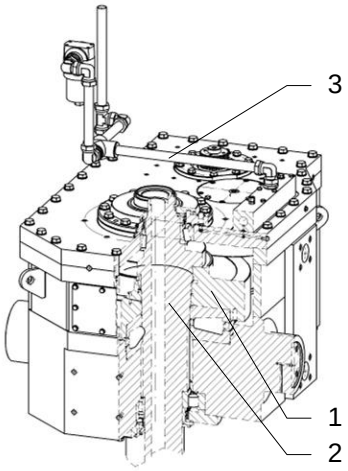

Abb. 11

- Gearbox
  The two-stage gearbox is helical cut with a total transmission ratio of 14:1. The speed of the engine is reduced twice before it is transferred to the bullgear (1) of the gearbox. The bullgear is located on the thrust bearing. The mainsahft is concentrically located in the bullgear and connected to it via multiple splining. The gearbox is lubricated with combined splash/pressure lubrication (3). If the gear oil has reached its maximum temperature it is piped via a bypass through an oilcooler. The oilcooler is included in the ventilation system of the motor.

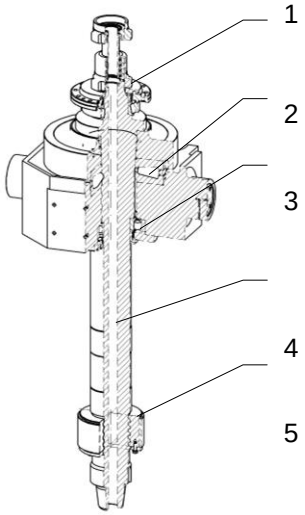

Abb. 12

- Mainshaft
  The mainshaft (4) – powered by the bullgear - is located in the gearbox together with the thrust bearing (2). It is conducted via lower bearing (3). In order to execute drilling fluid a washpipe (1) is connected. At the bottom of the mainshaft there is an API pin as connection to the drill string. The drill string is powered by the mainshaft. The mainshaft holds the load collar (5) which bears the link adapter the drill pipe during elevator operation.

3.1.1.3 Mud Supply

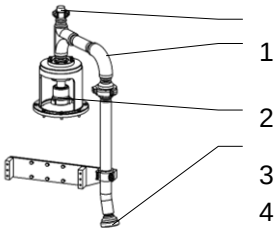

Abb. 13

The mud feeding comprises a 3“ washpipe and a goose neck with 2“ Fig 1502 input for wireline operation as well as a 4” Fig 1002 mud hose connection. The mud feeding disposes of a pressure rating of 7500 PSI.

3.1.1.4 Onboard Hydraulic Unit

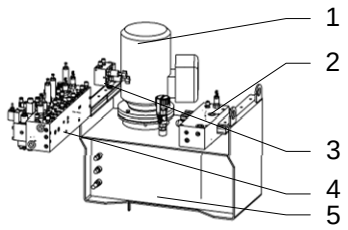

Abb. 14

The hydraulic unit disposes of

- Speed controlled internal gear pump(1)
- Valve block for the hydraulic unit (2)
- Valve block for the pipehandler (3).
- Main valve block (4)

Valves are operated by robust 24 volt coil. A low-noise pump is integrated in the stainless steel system tank (5).

3.1.1.5 Protection Frame

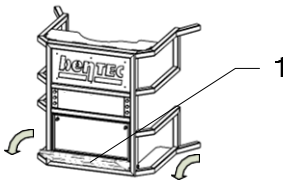

Abb. 15

The protection frame is fixed at the front of the Top Drive. A service platform(1) can be swung out for installation and repair work

3.1.2 Pipehandler

The Pipehandler consists of the following sub assembly groups:

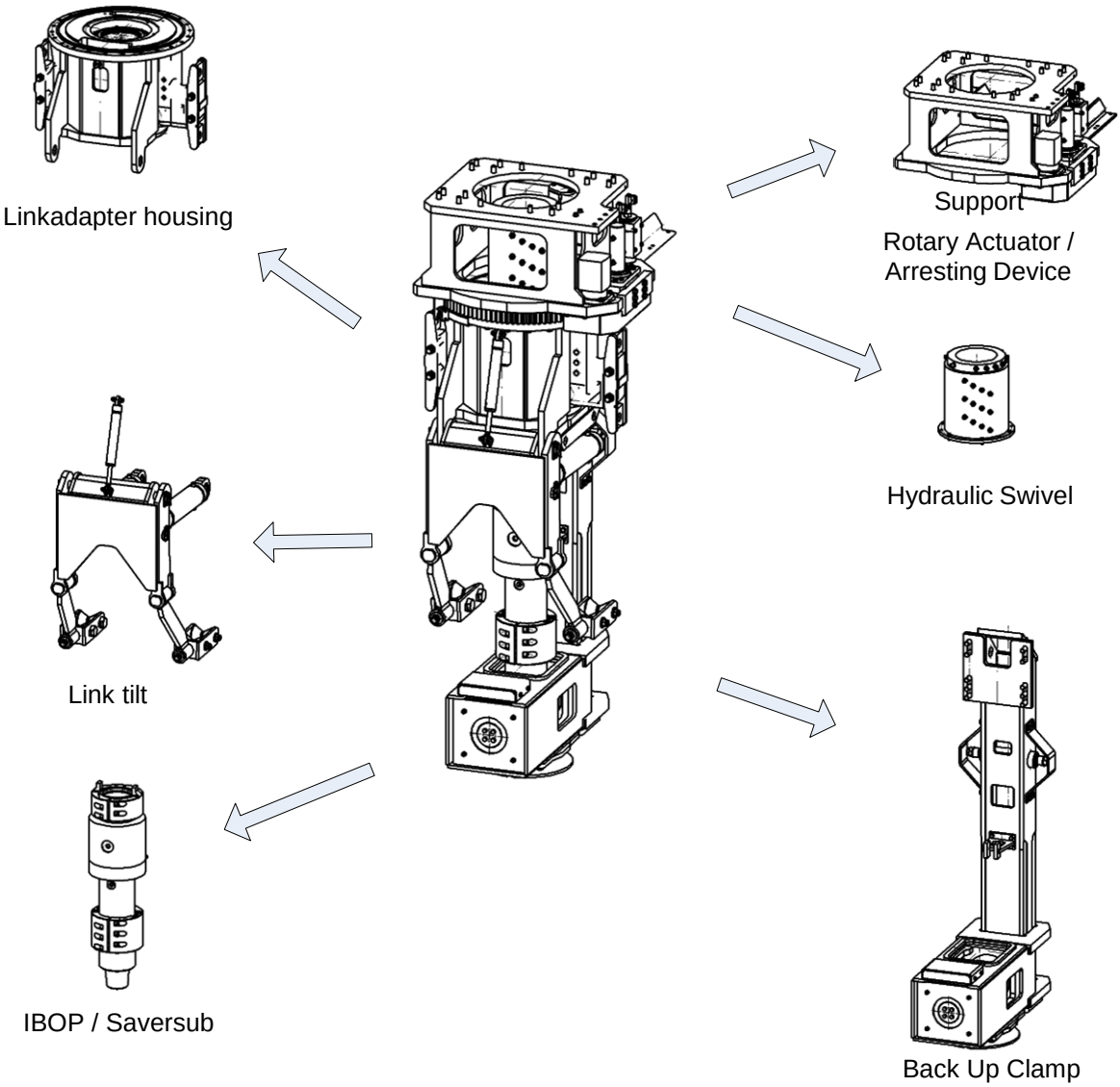

Abb. 16

3.1.2.1 Rotary Actuator

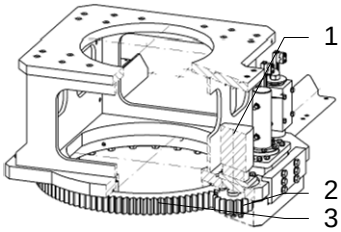

- Hydraulic Rotary Actuator
  The pipehandler is infinitely rotatable by 360 °. The main gear wheel (3) is run by the pinion. The pinion is moved by a hydraulic drive.

Abb. 17

3.1.2.2 Arresting device

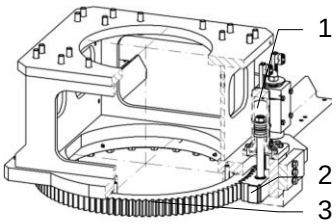

- Arresting Device
  The gear segment (2) is moved by a hydraulic cylinder (1). It grabs at the main gear wheel(3) and arrests the pipehandler in intervals of 3°.

Abb. 18

3.1.2.3 Hydraulic Swivel

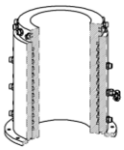

- Hydraulic swivel
  Hydraulic lines of the consumer of the Pipehandler are transferred through the hydraulic swivel. Free channels are available, enabling the connection of additional consumers.

Abb. 19

3.1.2.4 Linkadapterhousing

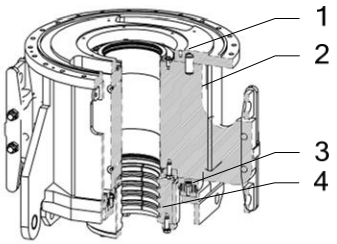

- Linkadapterhousing
  The linkadapter (2) positioned in the linkadapterhousing (1). The link adapter is supported by the Liftingspring (3). While drilling the liftingspring raises the linkadapter thus enabling free rotation of the mainshaft. The load collar (4) holds the linkadapter during elevator operation. The load collar transfers the load into mainshaft. The load collar consists of two half-shells with grooves that grap into the mainshaft. A housing keeps the shells together..

Abb. 20

3.1.2.5 Linktilt

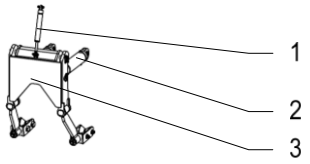

Abb. 21

- Linktilt
  Two hydraulic cylinders (2) move Links and Elevator. Hereby the elevator can be placed in any position necessary for picking the pipes.
  The system can lift a maximum of 2,5 t at a distance of 1,4 m to centre well.

The Link tilt system is able to move Links with in the following Limits

Link	L		f		b	
	[mm	[``	[mm	[``	[mm	[``
108`	274	10	147	5	201	7
120`	304	12	163	6	223	8
132`	335	13	108	7	246	9
144`	365	14	196	7	268	10
168`	426	16	229	9	313	12
180`	457	18	245	9	335	13

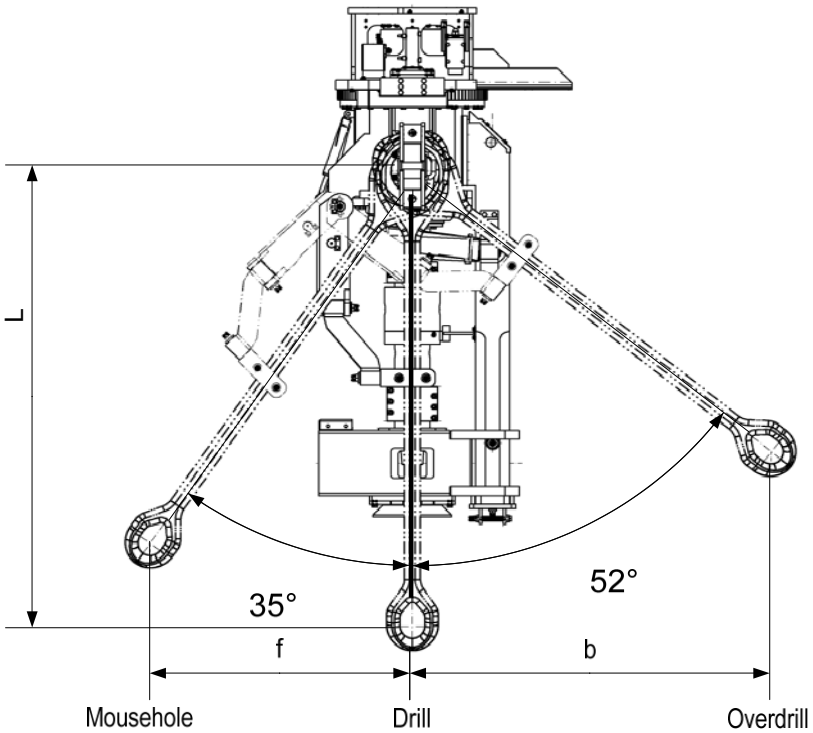

Abb. 22

3.1.2.6 Pipe handler Monitoring

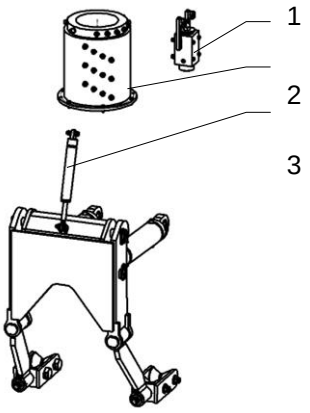

- Pipe handler Monitoring
  The position of the elevator is determined at all times. A hydraulic cylinder (3) communicates via hydraulic swivel (2) with a measuring cylinder (1)
  transferring the elevator position to a connected Drawworks Anti Collision
  System. Depending on the Anti Collision System a number of different link positions can be teached in, to be approached during drilling operation.

Abb. 23

3.1.2.7 Back up Clamp

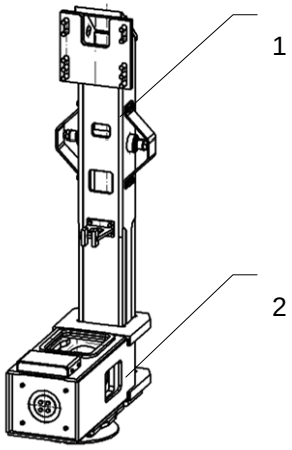

- The purpose of the backup Clamp(2) is making up and breaking drill pipe connections between Top Drive (Saversub) and drill string. The back up clamp is connected to the Linkadapterhousing via torque beam.(1)

Abb. 24

Abb. 25

The Jaw Assemblies (1) are moved by a hydraulic cylinder (2). ... different ... 's of jaw assemblies allows making up and breaking of drill pipe with various OD`s. The To

zes for other Tool Joint OD's are available as the option "Tool Joint Adapter Kit"

Jaw size	Tool Joint OD
I	4" – 5"
II	5 ¼" – 6 ¼"
III	6 ¼" – 7 ½"
IV	7 ½" – 8 ½"

1

2

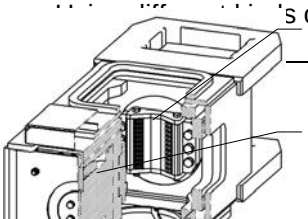

3.1.2.8 IBOP/ Saversub

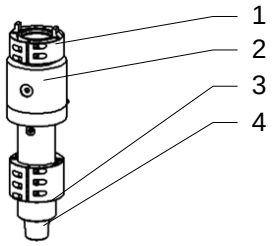

Abb. 26

The IBOP (2) is connected to the mainshaft via API pin

Intern

al

Blow

Out

Preventer

The saver sub (4) is screwed between IBOP (2) and pipe. Dielocks (1,3) prevent the threaded joints from over torque from the mainshaft to the IBOP and accordingly from the IBOP to the saver sub.

3.1.3 Carriage Package

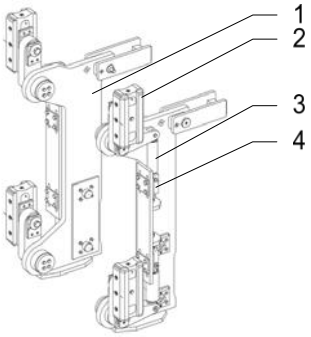

Abb. 27

The Top drive is guided by a carriage package. It transfers the torque from the top drive into the Guide rails.

The Carriage Package consists of a frame(1) with slide shoes(2), it transfers the Torque it to the Mast structure. The glide shoes are equipped with vibration dampers (3). Adjustment to centre well is performed by adjusting devices(4)

3.1.4 Torque Beam Assembly

Abb. 28

The Torque beam assembly absorbs the torque of the guide dolly and transfer it to the mast structure. The Torque beam assembly is segmented into 4 sections and delivered within a transport frame. The Transport frame allows easy and safe handling during transport and Rig up.

3.1.5 Hoisting equipment

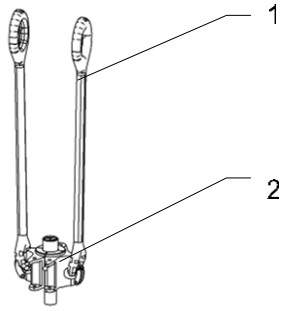

Abb. 29

The Top Drive can be equipped with the following Links(1) and elevators(2)

Load	Size
350 ton	2 ¾” x 120” (recommended)
350 ton	2 ¾” x 132”
500 ton	3 ½” x 120” (recommended)
500 ton	3 ½” x 144”

Other elevator link sizes are available on request.

Elevator links for Casing running Tools are available on request. Manual Elevators are available in the following sizes:

350 ton

500 ton

A Bushing set of the for the following Drillpipe sizes will be attached: 3 ½” , 4 ½” , 5” , 5 ½” , 6 5/8”

Bushings for other Drillpipe sizes are available on request.

Hydraulic elevators are available on request. Hydraulic connections for a hydraulic elevator are already available.

3.1.6 Tool Kit

The top drive will be delivered with

- IBOP Hex wrench
- IBOP repair tools
- Manual oil pump

3.2 Top Drive Control

The Top Drive Control System consist of the following parts

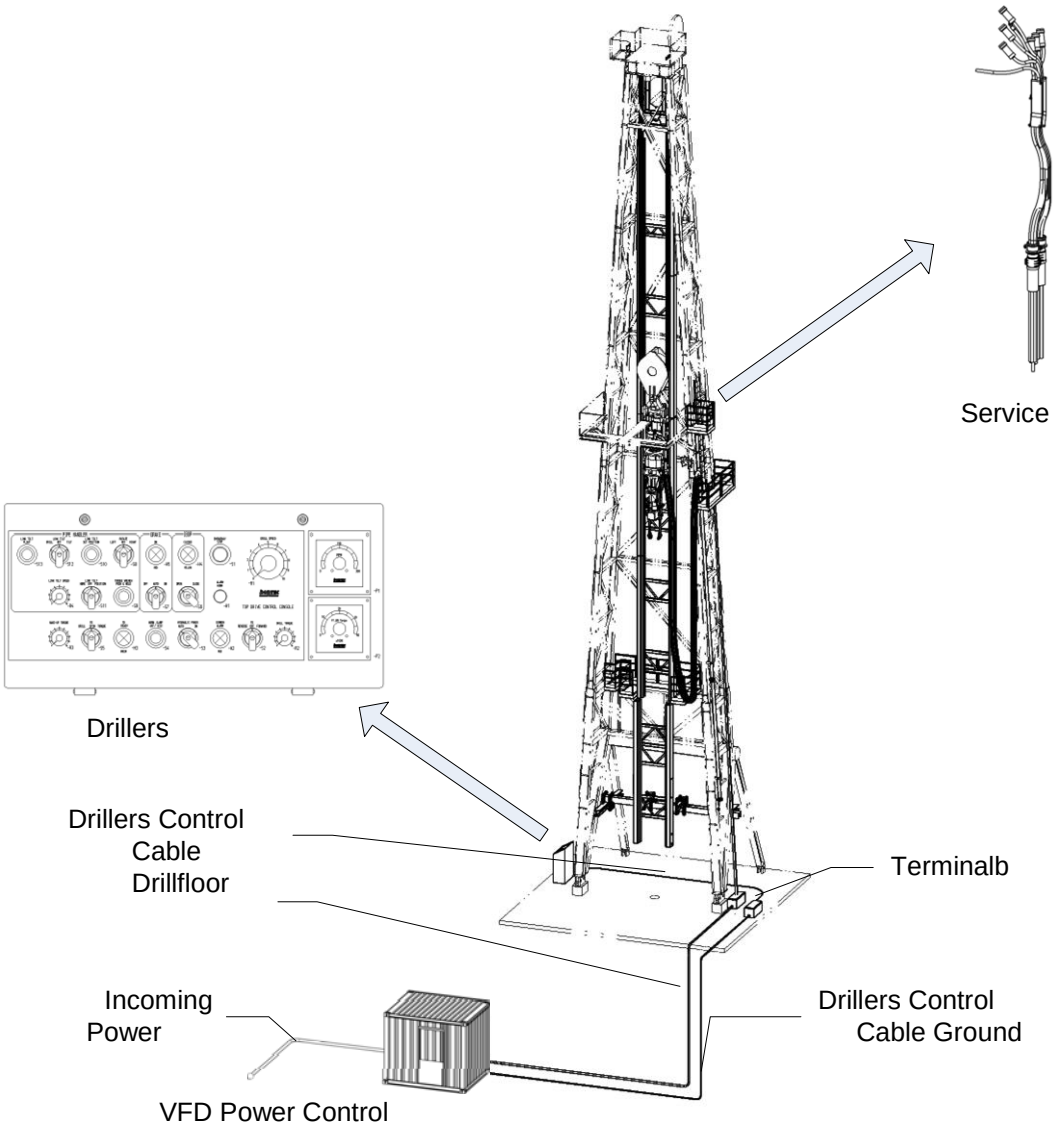

Abb. 30

3.2.1 Service Loop

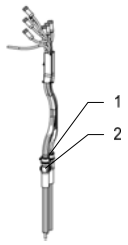

Abb. 31

The Top drive has a Power Loop (1) that supplies electrical power to the motor and a Control Loop (2). The control Loop holds all control lines and the electrical power supply for the auxiliary drives.

The Loop Length is based on the existing rig specifications.

The Length of the Supply Cable is determined by customer or recommended by Bentec.

The Length of the Incoming Power Cable is determined by customer or recommended by Bentec.

3.3 Drillers Control

The Top Drive is controlled by the Panel shown below. This panel is used as a standalone unit installed within the doghouse.

An implementation within the Drillers Chair is available on request.

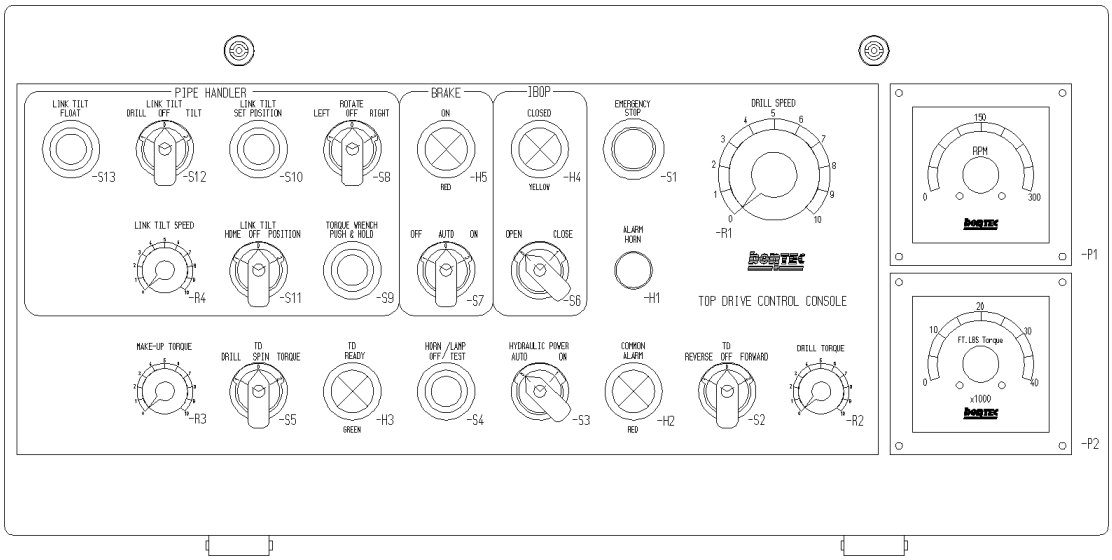

Abb. 32

3.4 VFD Power control System

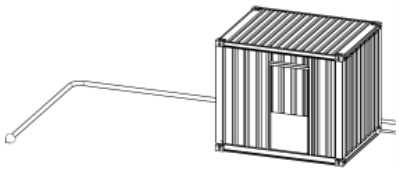

Abb. 33

The VFD Power Control contains all control devices and frequency converters that are needed to operate the Top drive.

- Container Dimensions: Width: 3m / Length: 3,4m / Height: 3m
- ISO Container with Lifting Edges & Pad eyes for rigging
- Sun shed roof, entrance door and removable front
- Heat insulation
- Environmental temperature -45°C to +55°C
- 2 Air conditions 15kW each
- 1 heating unit 2kW
- Incoming switchboard 600V/60Hz or 690V/50Hz 3Phase
- 1000A draw out circuit breaker
- Plug panel 400mm² power pins 6 each
- Power choke and rectifier
- Air cooled VFD Inverter 1600A for main motor
- MCC for all auxiliary drives with VFD’s for support drives
- Chopper unit 200kW intermittent
- Default incoming power cable

3.4.1 VFD – Power Supply

The Power Supply consists of an AC Bus (600/690V) to feed the transformer, the MCC Consumers a Diode Bridge with choke and fuses and the incoming circuit breaker (which feeds the DC Bus). The DC Bus feeds the VFD-Unit for the TD Main Motor.

Technical Data:

Supply Voltage: 600/690V
DC Current:
1700
A Diode Bridge B6U

The plug panel for Power Supply is installed outside of the container. For each Phase there are two (2) Power Pins available. (3x2 Power Pins)

3.4.2 VFD – Power Stack & VFD Controls

The BENTEC VFD Units are designed not only to meet but exceed the customer requirements. The fool-proof design allows an easy & safe operation for the staff, field-bus connected PLC's are used to offer a comfortable maintenance, even via Internet (Option).

Technical Data:

Supply Voltage:	820…950 V DC
Output Voltage:	575 V AC
Output Current:	1600A
Programmable Logic Controller:	MODICON
Schneider Cooling System:	Air Cooled

Alarms are displayed in clear languages including histogram and display of actual system data for maintenance and troubleshooting purpose in one central Display.

All controls for the Top Drive like Link tilt, etc. are included in the VFD System.

The plug panel for the connection of the Top Drive is installed outside of the container.

3.4.3 VFD – Motor Control center (MCC)

The MCC is equipped with starters and feeders to the requirements of the Bentec Top Drive. Each starter will be complete with a magnetic only breaker, a contactor and an ambient compensated overload element (heater). All Status and Alarm messages will be indicated on a separate Human machine interface.

3.4.4 VFD – Braking Chopper Module & Resistor

The braking chopper module is installed to feed the braking resistor for regenerative braking.

Technical Data:

Chopper Module 200kW

intermittent Braking resistor

50kW continuous

3.4.5 VFD – Transformer

One transformer fed by AC Supply panel to fed 460/400/230V consumers of the MCC and small power distribution.

Technical Data:
Rated power: 50kVA
Primary voltage:
600/690V
Secondary voltage: 400/460V

3.4.6 VFD – UPS System

One battery buffered UPS system to feed all control systems with uninterruptable stable power supply to allow for safe operation.

Technical Data:
Input 400VAC,
50/60Hz Output: 24-
28V DC / 40A
Buffer battery capacity: 24V50Ah

3.4.7 VFD – ESD System

This safety system is split in two parts as follows:

Emergency Shut Down:

Single systems VFD, MCC, TD Control will be shut down in a controlled safe way

Blackout:

All systems will be shut down in a safe way and all power will be shut off.

3.4.8 VFD – Air Conditioning Unit

Two air conditioners are installed inside of the container to monitor and control the temperature inside of the container at a level of 25°C. The air is also used to cool all controls as well as the air cooled VFD.

3.5 Incoming Power Cable

Cables for connection of the VFD container with the Existing SCR unit. Other lengths are available on request. The Cables are pluggable on both sides.
Customer supply power 690V/50Hz or 600V/60Hz – 760kW

4 Transport

Transport Data

Description	Value	Dimension
Length	7400	mm
Width	2880	mm
Height	2880	mm
Weight	20.000	kg

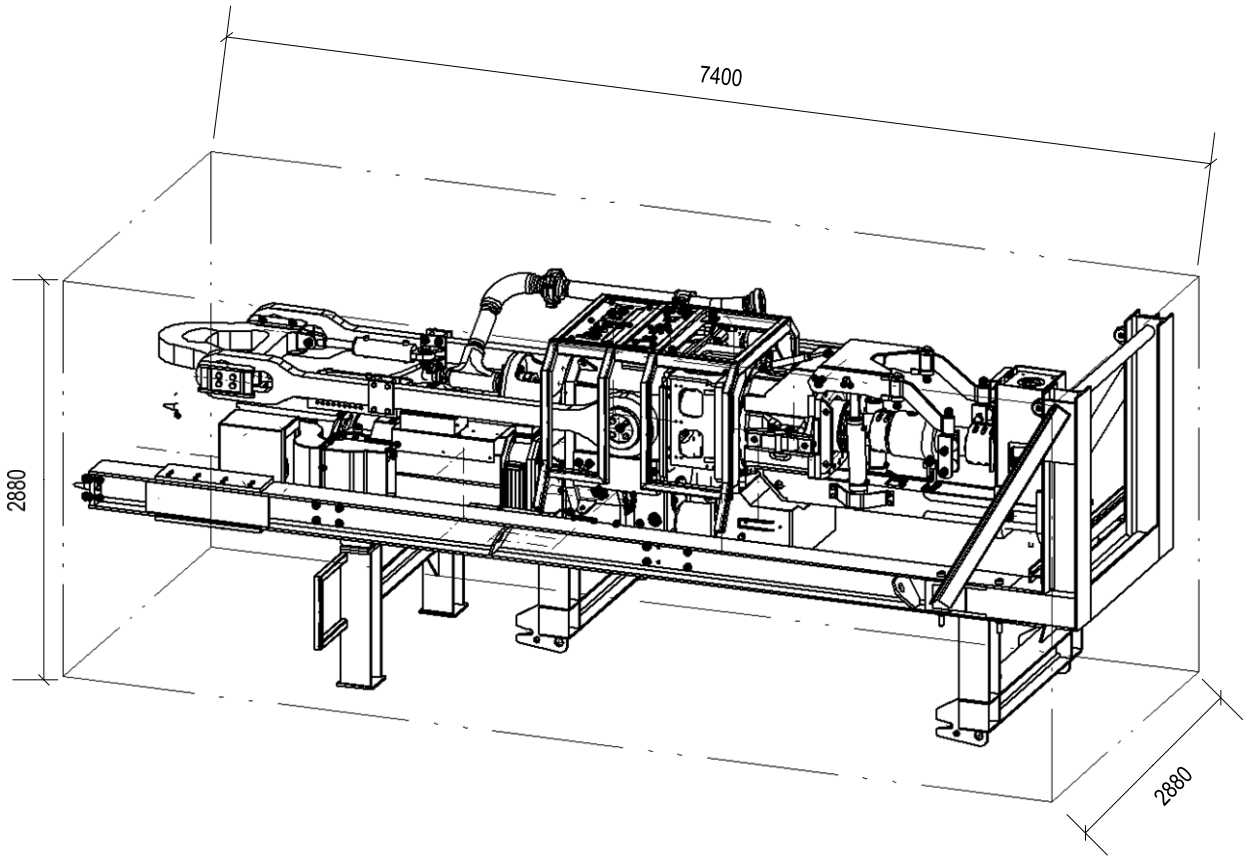

Abb. 34

5 Recommended Option - Rig survey

For a turnkey Top Drive implementation Bentec recommends a rig survey in advance to fit the Top Drive system in an optimal way into the existing rig. The Rig survey takes two days and will be performed by two Bentec engineers. The Following Points will be surveyed.

Survey Contents:

- Measurements at Mast
- Measurements on Drill floor
- Measurements on fingerboard Level
- Measurements for Tieback kit
- Check of Mast for Service Loop implementation
- Check of Mast for possible collisions with the Top Drive
- Check of Doghouse for control implementation
- Check of Power supply

6 Recommended Option - Implementation Kit

An Implementation kit can be offered after a rig survey to provide a turnkey implementation for the Bentec Top Drive. The Implementation kit includes the following parts. Size and design of these parts are depends on the results of the rig survey.

Implementation kit Contents:

- Hang off Links for Crown Block Section
- Intermediate Tiebacks
- Lower Tieback
- Misc. Beams for implementation

The Implementation of Bentec Top Drives may influence the statics of the Mast. Bentec will submit static relevant data's within a confirmation drawing after purchase order. The client is responsible for the verification of the Mast statics.

To implement the Top Drive in an efficient way Bentec need the following technical Drawings (CAD-File or scanned file):

- Mast / Derrick – detailed Drawings
- A-Frame (if available)
- Drillfloor Layout
- Fingerboard
- Crown Block
- Rig Layout
- Standpipe Information
- Drillpipe sizes which should be use on the Rig
- Elevator Links & Elevator Information
- Travelling Block Information

7 Option - Training

The following Training courses are available in advance or onsite.

7.1 Training Course – Operation

This training course includes the complete operation of the Top Drive System. This course contains one theoretical part and one practical part.

Training Contents:

- Top Drive commissioning & decommissioning
- Top Drive operational functions
- Detailed training of the mechanical systems
- Detailed training of the electrical systems
- System safety

Participants:

This Course is provided for: Driller, Toolpusher, Repair- and Maintenance Crews or people who are directly responsible for the Top Drive

7.2 Training Course – Hydraulics

This training course includes a deep training of the hydraulic system and their parts of the Top Drive.

Training Contents:

- Hydraulic plans
- Hydraulic pressure unit (HPU)
- Operation of all hydraulic circuits.
- Maintenance of the hydraulic system
- Installation of the hydraulic pump
- Installation of control elements

Participants:

This Course is provided for: Repair- and Maintenance Crews or people who are directly or indirectly responsible for the hydraulic functions of the Top Drive.

7.3 Training Course – Electrics

This training course includes a deep training of the electric system and their parts of the Top Drive.

Training Contents:

- Electrical plans
- Power Supply
- AC-Motors – VFD-Technology / PLC Controls
- Maintenance of the Electrical System
- Safe operation at the electrical systems

Participants:

This Course is provided for: Electric Crews or people who are

directly or indirectly responsible for the electrical functions of the Top Drive.

7.4 Training Course – Mechanics

This training course includes a deep training of the mechanic system and their parts of the Top Drive.

Training Contents:

- Mechanical plans
- Load Path
- Main Assemblies
- Sub Assemblies
- Lubrication & hydraulic System
- Recommended Maintenance
- Safe operation at the mechanical systems

Participants:

This Course is provided for: mechanic & maintenance Crews or people who are directly or indirectly responsible for the mechanical functions of the Top Drive.

8 Option - Yearly Maintenance Service

The Yearly Maintenance service will be done by Bentec onsite. Within the yearly Maintenance Service Our Top Drive Maintenance Specialists will be check all the Top Drive Parts, systems and functions. The following points are all points that have to be done according to the technical documentation. If there are some parts or systems need to be repaired or replaced Bentec will charge the costs separately

Maintenance Service Contents:

- Maintenance of all Motors
- Maintenance of the gearbox
- Maintenance of the complete hydraulic system
- Maintenance of the complete mechanical system
- Maintenance of the complete electrical system
- Function Test

9 Option - Recommended Spare Parts for one year

The recommenced spare part package contains wear parts and spare parts that needed during normal operation for one year. The Spare Part kit guarantees a safe uptime of the Top Drive due to spare parts availability at the rig or base.

10 Option - Lubricants for one year

Lubricants for the Top Drive are

Summer Lubricants

- Hydraulic Oil: Shell Omala HD 150
- Gear Oil: Shell Tellus 32

Winter Lubricants (recommended for Temperatures <0°C)

- Hydraulic Oil: Shell Tivela 150
- Gear Oil: Shell Tellus 32 Arctic

11 Option - Service Loop Container

The Service Loop Container is an open Top 20 ft open top container. The Service Loop and Service Loop saddle can be stored within this container during rig move. The Service loop will be stored within this container in optimal environments and avoid any damages during transport and storage.

12 Option – Saver Sub Set

The Top Drive is equipped with a one Saver Sub Set + one Saver sub for spare. The Thread Connection to the Drillpipe is NC50. Additional Saver subs and thread Connections are available on Request. The Following sizes are available. Saver subs quality control is according to API 7-1

- NC 38
- NC 40
- NC 46
- NC 50
- 5 ½” FH
- 6 5/8” FH

Special threads are available on request.

13 Option – Tool Joint Adapter Kit

To clamp different Tool Joint sizes an Adapter Kit is available. The Adapter Kit consist a Jaw Assembly and a stabbing guide which fits to the Tool Joint Range.

The Following Tool Joint OD’s are possible:

- 4”-5”
- 5 ¼” – 6 ¼”
- 6 ¼” – 7 ¾”
- 7 ½” – 8 ½”

14 Option – Wireline Adapter

The Wireline adapter allows using Wireline Tools with the Bentec Top Drive. The Wireline Adapter will be mounted below the Pipehandler Main Frame.

15 Option – Top Drive Control Driller’s Chair implementation

The Top Drive controls can be implemented into an existing Driller’s Chair. The Implementation work onsite will be executed by a Bentec Service engineer.
Technical Information’s about the Drillers chair are necessary in advance

16 Option – Color Camera system

A Color Camera system is a fixed or pan- and tiltable Color Camera. This Camera can be installed at any position on the rig to monitor hazardous areas like finger board level, drillfloor level, and crown block level. The preferred position of the camera needs to be determined by the customer. The Monitor the Camera is mounted in the Driller's Cabin. The Number of Camera's and Cable Lengths has to be determined by the customer. The printed boards for the controls are mounted in a separate Ex'd' box. Cablings from the camera to the Ex'd' box is directly connected without plugs. ATEX certified plugs are available on request.

Specifications Camera

- EX de housing with temperature controlled space heater
- Stainless steel weather protection hood
- Size: 120 x 120 x 400 mm / 5kg
- Automated brightness control
- Motor operated zoom & Autofocus
- Excellent clear picture even bad light conditions

Specifications Monitor & Control

- Housing IP65, made in stainless steel with installation holder
- Size: ca. 450 x 350 x 280 mm / 10kg
- 12" (1024x768) TFT Color Screen Panel - IP65
- Light intensity 1.300 candelas
- Galvanic separation of video signal
- 50m multicore control cable halogen free for connect each camera
- Camera selection switch
- Zoom in/out / pan left & right / tilt up & down
- Switches military standard

Specifications Pan/Tilt Unit

- Pan angle: 356° Tilt Angle 176° & end stop limits
- Size: 165 x 286 x 228 mm / 18kg / max. load 35 kg / Ex 'd' housing

Power Supply

- 230V AC 50/60Hz

17 Option – Top Drive Genset (Independent Power source)

The Top Drive can be equipped with a Genset Module to operate the Top Drive an independent unit.

18 Option – Offshore Certification

For Offshore applications the Top Drive system will be certified by a third-party organisation. This Certificate is formally known as a Case-by-Case approval.

Supported Certification Organisations

- DNV – Det Norske Veritas
- ABS – American Bureau of Shipping
- Lloyds British

The Certification includes design verification and product verification. Furthermore all load-path included parts will be Type approved. Interface related points between the existing rig system and the Top Drive System need to be clarified during an interface clarification meeting between Bentec and client.