Supplementary Paperwork

Customer Name:
Engine Type: RB211 TRENT 884-17
Engine Serial Number: 51340
Sales Order:
Issue Date: 19 NOVEMBER 2019

Table of contents:

- [√] Test Cell Data
- [√] Trim Balance Final Trim Result
- [√] Data Entry Plug Programmed Data Sheet
- [√] Fan Blade Weight & Distribution Chart (Computer Program Report)
- [√] TRENT 800 LPC Fan Case Inspection Details
- [√] Engine Build Setting Dimension Records
- [√] Final Stage Check (PIC)
- [√] Engine Life Control Items Off - On Status Record
  Engine Major Components Off - On status Record
- [√] Trent 800 Critical Group A Part - Log Card
  (LPC Rotor Disc, IPC Rotor Shaft, HPC 1-4 Drum, HPC 5-6 Drum, IPT Rotor Disc)
- [√] Unserviceable Label for rejected / replaced LLP

Trent 800 Engine Acceptance Sheet

Engine Type:	RB211-Trent 884-17	EPR Trim Index 1	14		
Engine S/N:	51340	EPR Trim Index 2	14	DEP S/N:	BX90038
Customer:		TGT Trim Profile:	P14i	Engine Test Sched:	FULL TEST
Job Number:	1390047	Number of Starts:	3	Total Run Time:	2:46

Remarks:

Param	Units	Norm	N1	N2	N3	EPR@Max
Vib A	IPS	0.53	0.18	0.05	0.40	1.552
Vib B	IPS	0.53	0.18	0.05	0.41	

Param	Units	Takeoff Limit	Takeoff Result	MaxCont Limit	MaxCont Result
Thrust	lb	85430	85430	70210	70210
N1	%	95.39	90.87	87.56	84.73
N2	%	101.56	97.55	97.98	94.00
N3	%	99.47	96.90	95.91	93.82
TGT	degC	833.4	783.0	759.0	722.0
SFC	lb/lb/lbf	0.3504	0.3270	0.3345	0.3126
EPR	ratio	1.4876	1.4876	1.3558	1.3558
Oil Con	USqts/hr	0.70	0.32	-	-

I hereby certify that the test of the above mentioned engine has been carried out in accordance with the requirements of RB211-Trent 884-17 engine test schedule and found satisfactory.

Tester Signature	Stamp	Date
	H P 032 C.P. WONG 622291	16 NOV 2019

CERTIFICATION MADE IAW HAESL GTI-P-002-88

Signature	Stamp	Date
	H P 104 T.Y. CHENG 606957	16 NOV 2019

TRENT 800 TRIM BALANCE
FINAL TRIM RESULTS

1. ESN: 51340

2. CUSTOMER:

3. S/O: 1390047

4. Number of weights fitted: 0

5.Hole Positions	NONE									

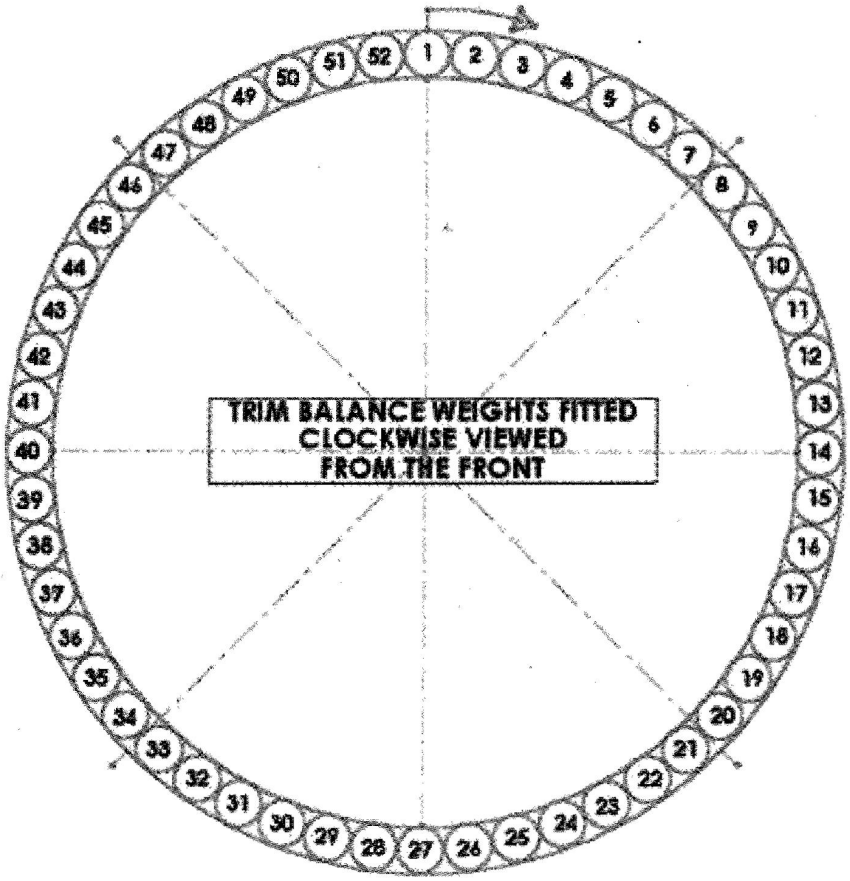

16 NOV 2019

6. Signature/Stamp/Date

FORM01673R02

Document Title:	Recording Document - Trent 800_Eng_Test_Data_Plug_ Appendix 02
Document Issue No.:	01
Sales Order No.:	
Engine/Module Type:	TRENT884
Customer:	ROLLS-ROYCE PLC
Module No.:	
Engine No.:	51340

Engine Test (Trent 800)

Appendix 2 - Engine test programmed data entry plug

	Part Number	Serial Number
Programmed data entry plug	DEP6000MK3	

HR Stamp/Name/Date

C.P.V 6222..

18 NOV 2019

```
TRENT 800 DATA ENTRY-PLUG
PROGRAMMING UNIT    UT1870
Rolls-Royce plc
Copyright (c) 2006

Software                    UT1872
Programmer Unique ID        1017626

IF Pod Hardware Rev            1.0
IF Pod Software Rev            1.0
IF Pod unique ID                 3

Date : 18 November 2019
Time : 15:37

DEP Serial No : BX90038

Engine Serial No.            51340
Engine Standard                 07
Rating Index              B777-884
Bump Index                 No Bump
Intermix                        01
Resultant EPR Trim1             14
EPR Trim1                       14
Resultant EPR Trim2             14
EPR Trim2                       14
Nozzle                    NOZZLE 0
N1 Trim Index1                  25
N1 Trim Index2                  22
TGT TRIM POINTS
1  1228K  2  1276K  3  1290K
   093K      102K      096K

DEP Must Be Verified
With OMS Screen Display
```

Name : WONG CHUNG PING

Signature : .....

Date : 18 NOV 2019

Time : 16:00

The printout should show " nozzle option : nozzle 0" immediately after the DEP was programmed. Otherwise the printout from the Print Plug Data option should show " Nozzle Option : unknown". These two message refer to the same condition, it is thus no need to look for an error.

Reference : E.M. 72-00-00 Special Procedures - 51, subtask 72-00-00-820-006

Module : F0042 Trent 800 : LP Compressor : Build : 1 Operator : 619667

Date : 07 Nov 2019 Time : 10:48:22

Blade No.	Disc Slot No.	Serial No.	Blade Type	Radial Weight oz.in.	Tangential oz.in.	Axial Weight oz.in.	Blade Mass oz.	Tip Position mm.	Tip Stagger degrees
1	25			10654.80	63.10	-81.20	392.80	53.83	0.00
2	18			10685.10	49.90	-85.90	392.80	54.58	0.00
3	8		L	10820.70	75.80	-78.00	392.80	52.32	0.00
4	13			10771.40	60.80	-73.90	392.80	53.90	0.00
5	21		L	10962.60	64.60	-80.50	392.80	52.99	0.00
6	11			10853.50	58.60	-94.20	392.80	53.97	0.00
7	17			10472.60	52.30	-86.40	392.80	53.11	0.00
8	7		H	10575.30	40.40	-78.20	392.80	54.94	0.00
9	14		H	10791.80	41.50	-70.90	392.80	56.35	0.00
10	1		H	10822.20	47.00	-81.10	392.80	55.69	0.00
11	4			10739.60	63.00	-73.40	392.80	53.40	0.00
12	16			10856.50	72.90	-74.00	392.80	54.65	0.00
13	19			10903.70	62.60	-76.20	392.80	54.31	0.00
14	20		H	10946.10	65.70	-77.70	392.80	54.84	0.00
15	10			11045.00	67.70	-88.10	392.80	53.32	0.00
16	3			10689.10	50.20	-81.80	392.80	54.72	0.00
17	15		L	10599.60	46.80	-79.40	392.80	52.30	0.00
18	5			10793.50	51.60	-85.20	392.80	54.24	0.00
19	9			10980.80	66.20	-80.90	392.80	54.07	0.00
20	23			10746.70	59.50	-75.70	392.80	53.93	0.00
21	6			10798.20	60.20	-73.00	392.80	53.46	0.00
22	26			10670.30	58.80	-80.50	392.80	53.91	0.00
23	22			10917.70	66.10	-82.20	392.80	53.55	0.00
24	2		L	10774.70	68.10	-78.30	392.80	52.25	0.00
25	12			10583.00	36.90	-78.40	392.80	53.78	0.00
26	24			10794.20	57.10	-86.40	392.80	53.05	0.00

Initial Static Unbalance (oz.ins & deg)	674.017 @ 198.708
Initial Couple Unbalance (oz.ins & deg)	24.336 @ 176.108
Final Static Unbalance (oz.ins & deg)	18.081 @ 253.524
Final Couple Unbalance (oz.ins & deg)	3.270 @ 207.977
Plane Separation in inches	14.960
WITH LINER EFFECT TAKEN INTO ACCOUNT	
Initial dB average noise at liner exit	0.000

C. K. MAK
4619667

LEUNG
600446

- 7 NOV 2019

TRENT 800 LPC FAN CASE INSPECTION DETAILS

Engine S/N: 51340 Sales Order: 1390047

Inspected by: _____ Date: 31 AUG 2019
(DF Stamp and signatory)

Customer : ____

BOTTOM (6 O'CLOCK POSITION)

FRONT ACOUSTIC PANEL DETAILS: EMP RM1898 ISSUE 38 FIT NEW PANEL, REPLACE ALL PANELS IAW FRSG020

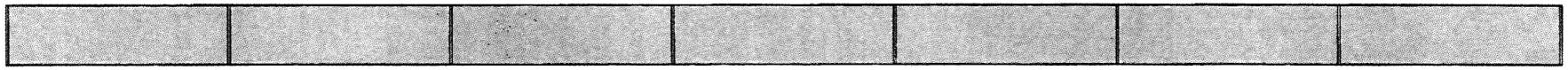

ATTRITION LINING DETAILS: Found Eroded on Attrition lining, REPAIR TO FRSG017

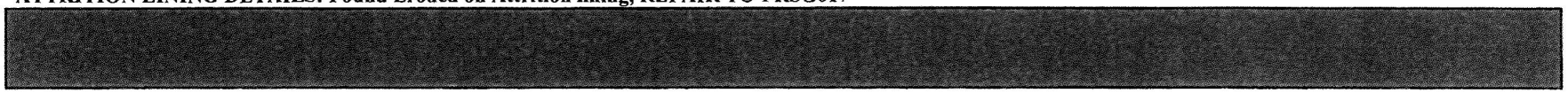

ICE IMPACT / REAR ACOUSTIC PANEL DETAILS: Found Debonded (47sqins) & Previously Repaired. (Total Area 74 sqins) . Repair to FRSG025

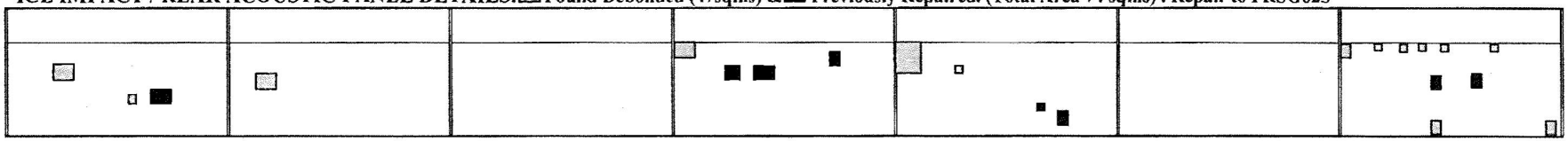

OGV INNER INFILL PANEL DETAILS: Found 3ea Piece Missing.Replace iaw EM

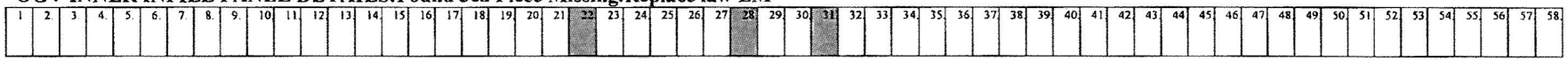

OGV OUTER INFILL PANEL DETAILS: FOUND 13EA OUTER INFILL PANELS IMPACT DAMAGED.REPLACE IAW EM.

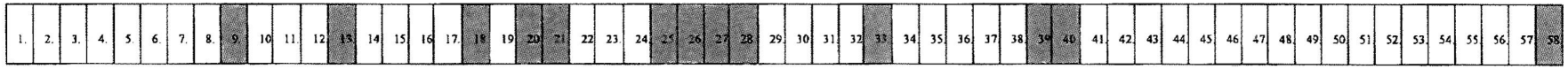

REAR CASE ACOUSTIC PANEL: EMP RM1898 ISSUE 38 FIT NEW PANEL, REPLACE ALL PANELS IAW FRSG045

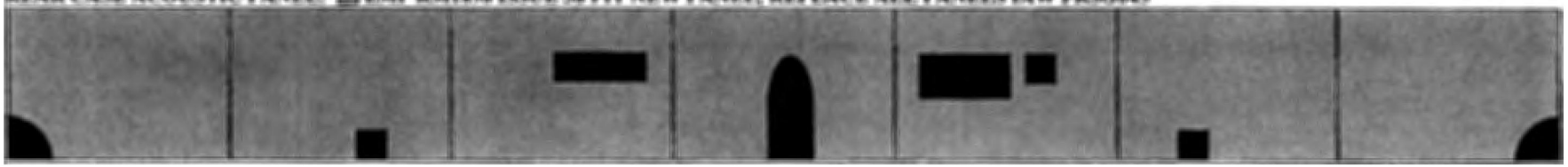

FORM02595R01

Document Title:	Recording Document - Trent 800_Final_M33_Logcard_ Appendix 1
Document Issue No.:	01
Sales Order No.:	
Engine/Module Type:	TRENT884
Customer:	ROLLS-ROYCE PLC
Module No.:	
Engine No.:	51340

Engine Build TRENT 800 (M33 Setting Dimension Log Card)

Appendix 1- MODULE 33 Setting dimensions log card

This is a QUALITY GATE. The recordings are critical build data and may be analysed by the Technical Department if required.

	Part Number	Serial number
Module 33 fitted	M03100083	
LPC Location Bearing fitted	FB222026	1

Intermediate Case Setting dim.	**AF**	270.7954	mm
IP Turbine Coupling Dim.	**H**	17.04	mm
LP Compressor Location Ball Bearing end Float	**J**	0.33	mm

HR Stamp/Name/Date

C P. LIU
121

13 NOV 2019

Document Title:	Recording Document - Trent 800_Final_M51_Logcard_ Appendix 2
Document Issue No.:	01
Sales Order No.:	
Engine/Module Type:	TRENT884
Customer:	ROLLS-ROYCE PLC
Module No.:	
Engine No.:	51340

Engine Build TRENT 800 (M51 Setting Dimension Log Card)

Appendix 2- MODULE 51 Setting dimensions log card

This is a QUALITY GATE. The recordings are critical build data and may be analysed by the Technical Department if required.

	Part Number	Serial number
Module 51 fitted	M05908AA	

IP Turbine Setting Dim.	**F**	319.51	mm
Tool Constant marked on Measuring bridge	**T1**	334.92	mm
Tool Constant from M51 Log Card	**T2.**	335	mm
Corrected IP Turbine Setting Measuring Dim.	**F2**	319.38	mm

HR Stamp/Name/Date

13 NOV 2019

Document Title:	Recording Document - Trent 800_Final_M52_Logcard_ Appendix 3
Document Issue No.:	01
Sales Order No.:	
Engine/Module Type:	TRENT884
Customer:	ROLLS-ROYCE PLC
Module No.:	
Engine No.:	51340

Engine Build TRENT 800 (M52 Setting Dimension Log Card)

Appendix 3- MODULE 52 Setting dimensions log card

This is a QUALITY GATE. The recordings are critical build data and may be analysed by the Technical Department if required.

	Part Number	Serial number
Module 52 fitted	M08908AB	

LP Turbine Setting Dim. (Refer to M52 Log Card)	**Q**	121.574	mm
Measuring LP Turbine Setting Dim.	**V**	121.759	mm

HR Stamp/Name/Date

K. 61

14 NOV 2019

Long Workscope Task List

Legacy Order:

Order:

Legacy Sales Order:

Description: T8_ENG_Final Stage Check

Certificate of Conformity:

Funct Location: TR51340NM MODULE NM

Sales Order Details

Sales Order: 1390047 *Customer:* ROLLS-ROYCE PLC *Engine type:* TRENT800 *Operator:* RR - NOKSCOOT AIRLINES

Equipment: 210477679 *Part No:* TRENT800 *Serial Number:* 51340 *Workscope Level:*

Engine/Module Details

Equipment: *Part No:* *Serial Number:* *Workscope Level:*

Component and Scheduling Details

Equipment: 210477711 MODULE NM *Maintenance Plan:* HQ0094/1

Part No: TRENT800 *New Part No:* *Workscope Level:*
Serial Number: 51340NM *Quantity:* 1

Start date: 01 NOV 2019 *Finish date:* 01 NOV 2019 *Order Created By:* 4145856 Siu Mei Lau

Sentencing/Workscope Details

Repair Schemes/Mods Called:

AA Final Stage Check (PIC)

Long text:

End of Header

Long Workscope Task List

Legacy Order:

Order:

Legacy Sales Order:

Work centre: **HKPCHECK** **Current Publication-Reference** Plant: **HK01** Operation: **0001** ConfNo: **444524733** Stamp/Date:

Latest Start Date: **01 NOV 2019** Latest End Date: **01 NOV 2019** Std.Time: **1.0 Mins**

Manual Revision Indicator

TL96 Trent-800 EM Ref E-Trent-2RR

This document complies with the specified manual.

If any discrepancy is found, report to Technical Services Department immediately.

Note: This operation serves as information only and no work completion stamp is required.

Work centre: **ENGINE STRIP,BUILD,P-IC,EBU (PROCESS)** Plant: **HK01** Operation: **0050** ConfNo: **444524725** Stamp/Date:

Latest Start Date: **01 NOV 2019** Latest End Date: **01 NOV 2019** Std.Time: **1.0 Mins**

Inspect the Acoustic Panels

Inspect the acoustic panels and ice impact panels for condition and security.

16 NOV 2019

Long Workscope Task List

Legacy Order:

Order:

Legacy Sales Order:

Work centre: **HKJCSENG** **ENGINE STRIP,BUILD,P-IC,EBU (PROCESS)** Plant: **HK01** Operation: **0100** ConfNo: **444524683** Stamp/Date:

Latest Start Date: **01 NOV 2019** Latest End Date: **01 NOV 2019** Std.Time: **1.0 Mins**

RMV fine scavenge filter hsg MCD & Insp

Remove oil fine scavenge filter magnetic chip detector. Visually inspect for contamination

Record:

[√] Satisfactory

[—] Unacceptable - If contamination cannot be identified, route to laboratory for examination

PM Order No.: ____/____

Then install MCD, torque tighten to 280 lbfin and wirelock.

Measuring Tool S/N: MC0886

16 NOV 2019

Long Workscope Task List

Legacy Order:

Order:

Legacy Sales Order:

Work centre: **HKJCSENG** **ENGINE STRIP,BUILD,P-IC,EBU (PROCESS)** Plant: **HK01** Operation: **0110** ConfNo: **444524738** Stamp/Date:

Latest Start Date: **01 NOV 2019** Latest End Date: **01 NOV 2019** Std.Time: **1.0 Mins**

Remove Oil Pump inlet screens for Insp

A. Remove six blank plates/MCDs from oil pump

B. Visually Inspect inlet screens for contamination.

TBH
Record:
[✓] Satisfactory
[—] Unacceptable - If contamination cannot be identified, route to laboratory for examination
PM Order No.: ____/____

FBH
Record:
[✓] Satisfactory
[—] Unacceptable - If contamination cannot be identified, route to laboratory for examination
PM Order No.: ____/____

HP/IP
Record:
[✓] Satisfactory
[—] Unacceptable - If contamination cannot be identified, route to laboratory for examination
PM Order No.: ____/____

IGB
Record:
[✓] Satisfactory
[—] Unacceptable - If contamination cannot be identified, route to laboratory for examination
PM Order No.: ____/____

SAGB
Record:
[✓] Satisfactory

142357

16 NOV 2019

Long Workscope Task List

Legacy Order:

Order:

Legacy Sales Order:

[ ] Unacceptable - If contamination cannot be identified, route to laboratory for examination
PM Order No.: /

EGB
Record:
[✓] Satisfactory
[ ] Unacceptable - If contamination cannot be identified, route to laboratory for examination
PM Order No.: /

C. Install blanking plates at the IGB, EGB, SAGB, TBH, HP/IPT and FBH positions and torque tighten bolts to 100 lbfin.

Measuring Tool S/N: MC 0894

ATA: 72-00-00-200-852

16 NOV 2019

Work centre: **HKJCSENG** **ENGINE STRIP,BUILD,P-IC,EBU (PROCESS)** Plant: **HK01** Operation: **0120** ConfNo: **444524684** Stamp/Date:
Latest Start Date: **01 NOV 2019** Latest End Date: **01 NOV 2019** Std.Time: **1.0 Mins**
Replace oil scavenge filter & Inspect

Replace oil scavenge filter and visually inspect the removed filter for contamination

Record:
[✓] Satisfactory
[ ] Unacceptable - If contamination cannot be identified, route to laboratory for examination
PM Order No.: /

Filter fitted, P/N : MPLA1016 S/N : 100812

P 572
H.F. CHAN
124751

16 NOV 2019

Long Workscope Task List

Legacy Order:

Order:

Legacy Sales Order:

Work centre: **HKJCSENG** **ENGINE STRIP,BUILD,P-IC,EBU (PROCESS)** Plant: **HK01** Operation: **0130** ConfNo: **444524685** Stamp/Date:

Latest Start Date: **01 NOV 2019** Latest End Date: **01 NOV 2019** Std.Time: **1.0 Mins**

Replace oil pressure filter & inspect

Replace oil pressure filter and visually inspect the removed filter for contamination.

CAUTION: MAKE SURE YOU HOLD THE FILTER ELEMENT IN POSITION UNTIL YOU INSTALL THE FILTER HOUSING. IF YOU DO NOT HOLD IT, THE FILTER ELEMENT CAN FALL AND BECOME DAMAGED

CAUTION: YOU MUST TIGHTEN THE FILTER HOUSING WITH YOUR HAND ONLY. IF YOU USE TOOLS YOU CAN CAUSE DAMAGE TO THE SCREW THREADS.

Record:
[✓] Satisfactory
[—] Unacceptable - If contamination cannot be identified, route to laboratory for examination
PM Order No.: /

Filter fitted, P/N : QA07168 S/N : RF4-6875

16 NOV 2019

ATA:72-00-00
Chapter/Task/Subtask: 440-012

Work centre: **HKJCSENG** **ENGINE STRIP,BUILD,P-IC,EBU (PROCESS)** Plant: **HK01** Operation: **0140** ConfNo: **444524686** Stamp/Date:

Latest Start Date: **01 NOV 2019** Latest End Date: **01 NOV 2019** Std.Time: **1.0 Mins**

Inspect external gearbox for leaks

Inspect external gearbox for leaks.

16 NOV 2019

Long Workscope Task List

Legacy Order:

Order:

Legacy Sales Order:

Work centre: **HKJCSENG** **ENGINE STRIP,BUILD,P-IC,EBU (PROCESS)** Plant: **HK01** Operation: **0150** ConfNo: **444524687** Stamp/Date:

Latest Start Date: **01 NOV 2019** Latest End Date: **01 NOV 2019** Std.Time: **1.0 Mins**

Replace with new LP fuel filter element

Filter fitted P/N : QA03403 S/N : NIL

1) Do a torque check of the central bolt in the filter cap assembly (79-21-11,02-045). Make sure that you do not loosen the bolt.

Torque value: 80 lbfin

Limits: 65 lbfin - 85 lbfin

2) Attach the filter cap assembly to the fuel/oil heat exchanger housing with the five bolts (79-21-11,02-050) and the five washers (79-21-11,02-052).

Torque value: 210 lbfin

Limits: 200 lbfin - 220 lbfin

3) Torque the drain plug and safetly the drain plug with OMat 2/142 safety cable.

Torque value: 115 lbfin

Limits: 110 lbfin - 120 lbfin

Measuring Tool S/N: 1) MC0894 , 2) MC0886 , 3) MC0894

16 NOV 2019

ATA: 72-00-34
Chapter/Task/Subtask: 420-276

Long Workscope Task List

Legacy Order:

Order:

Legacy Sales Order:

Work centre: **HKJCSENG** **ENGINE STRIP,BUILD,P-IC,EBU (PROCESS)** Plant: **HK01** Operation: **0160** ConfNo: **444524688** Stamp/Date:

Latest Start Date: **01 NOV 2019** Latest End Date: **01 NOV 2019** Std.Time: **1.0 Mins**

Change starter oil& check chip detector

Change starter oil and check chip detector

Tighten the magnetic portion of the drain plug with reference to CMM 80-12-17 Assembly Para. 4.F.: _____lbfin.

Measuring Tool S/N: _____

SHORTAGE RELEASE

16 NOV 2019

Work centre: **ENGINE STRIP,BUILD,P-IC,EBU (PROCESS)** Plant: **HK01** Operation: **0170** ConfNo: **444524689** Stamp/Date:

Latest Start Date: **01 NOV 2019** Latest End Date: **01 NOV 2019** Std.Time: **1.0 Mins**

Change engine oil, and top up oil tank

[—] Change engine oil, and top up oil tank

16 NOV 2019

Long Workscope Task List

Legacy Order:

Order:

Legacy Sales Order:

Work centre: **HKJCSENG** **ENGINE STRIP,BUILD,P-IC,EBU (PROCESS)** Plant: **HK01** Operation: **0180** ConfNo: **444524690** Stamp/Date:

Latest Start Date: **01 NOV 2019** Latest End Date: **01 NOV 2019** Std.Time: **1.0 Mins**

Inhibit after test cell running

Inhibit after test cell running or store engine more than 5 days.

H.K. CHEUNG
142357

16 NOV 2019

Work centre: **HKJCSENG** **ENGINE STRIP,BUILD,P-IC,EBU (PROCESS)** Plant: **HK01** Operation: **0190** ConfNo: **444524691** Stamp/Date:

Latest Start Date: **01 NOV 2019** Latest End Date: **01 NOV 2019** Std.Time: **1.0 Mins**

Install correct rating data entry plug

Install the correct rating data entry plug after engine test.

Engine rating : 884 Code : 40

P/N : DGP6000 MK3 S/N : BX 90038

C.P. WONG
622291

18 NOV 2019

Work centre: **HKJCSENG** **ENGINE STRIP,BUILD,P-IC,EBU (PROCESS)** Plant: **HK01** Operation: **0200** ConfNo: **444524692** Stamp/Date:

Latest Start Date: **01 NOV 2019** Latest End Date: **01 NOV 2019** Std.Time: **1.0 Mins**

Stamp and install data plate

Stamp and install data plate

H
P
C.P.
622291

18 NOV 2019

Long Workscope Task List

Legacy Order:

Order:

Legacy Sales Order:

Work centre: **HKJCSENG** **ENGINE STRIP,BUILD,P-IC,EBU (PROCESS)** Plant: **HK01** Operation: **0210** ConfNo: **444524693** Stamp/Date:

Latest Start Date: **01 NOV 2019** Latest End Date: **01 NOV 2019** Std.Time: **1.0 Mins**

Duplicate inspect data entry plug

1st Inspection Time: 16:30 Date: 18 NOV 2019 1st Inspection Stamp : 622291

2nd Inspection Time: 16:35 Date: 18 NOV 2019 2nd Inspection Stamp : T.Y. CHENG 606957

NOTE: AUTHORIZATION HOLDER STAMP IS REQUIRED FOR THIS OPERATION

Work centre: **HKJCSENG** **ENGINE STRIP,BUILD,P-IC,EBU (PROCESS)** Plant: **HK01** Operation: **0220** ConfNo: **444524694** Stamp/Date:

Latest Start Date: **01 NOV 2019** Latest End Date: **01 NOV 2019** Std.Time: **1.0 Mins**

Visually inspect nose cowl

Visually inspect nose cowl for satisfactory condition, pay particular attention to the followings:

A. EEC inlet/out and zone ventilation scoope to ensure that they are free from blockage.

B. Rear seal for deterioration.

C. P2/T2 probe.

NOTE: AUTHORIZATION HOLDER STAMP IS REQUIRED FOR THIS OPERATION

N/A NOSE COWL

SHORTAGE RELEASE

C.H. CHOSE 104224

18 NOV 2019

Long Workscope Task List

Legacy Order:

Order:

Legacy Sales Order:

Work centre: **HKJCSENG** **ENGINE STRIP,BUILD,P-IC,EBU (PROCESS)** Plant: **HK01** Operation: **0230** ConfNo: **444524695** Stamp/Date:

Latest Start Date: **01 NOV 2019** Latest End Date: **01 NOV 2019** Std.Time: **1.0 Mins**

Visually inspect engine intake

Visually inspect engine intake for satisfactory condition, pay particular attention to the followings:

A. Fan blades and spinner.
B. Fan blades fillers
C. Fan outlet guide vanes.
D. Fan case attrition linings.

S.W. LEUNG
606113
~~18 OCT 2019~~ 18 NOV 2019

Work centre: **HKJCSENG** **ENGINE STRIP,BUILD,P-IC,EBU (PROCESS)** Plant: **HK01** Operation: **0240** ConfNo: **444524696** Stamp/Date:

Latest Start Date: **01 NOV 2019** Latest End Date: **01 NOV 2019** Std.Time: **1.0 Mins**

Visually inspect M34 exterior

Visually inspect Module 34 exterior for satisfactory condition, pay particular attention to the followings:

A. LP and HP fuel tubes.
B. Strut drain lines.
C. Oil distribution system and tubing.
D. All not removed components and it's associated parts.
E. Hydraulic pipes.
F. Kevlar contamination wrap.
g. Underneath area of FOHE (79-21-11-01-030), Oil Tank (79-11-11-01-200) and AOHE (79-21-12-01-100)(refer to SUBTASK 72-00-34-420-146, 72-00-34-420-147-A00/B00 and 72-00-34-420-200)

Ensure all pipelines are free from damage, chafing, fretting and have sufficient clearances between them and neighboring hardness. Use mirror or suitable optical aids where necessary.

143
S.W. LEUNG
606113
~~18 OCT 2019~~
18 NOV 2019

Remark: CONDITION SATISFACTORY

NOTE: AUTHORIZATION HOLDER STAMP IS REQUIRED FOR THIS OPERATION.

Long Workscope Task List

Legacy Order:

Order:

Legacy Sales Order:

Work centre: **HKJCSENG** **ENGINE STRIP,BUILD,P-IC,EBU (PROCESS)** Plant: **HK01** Operation: **0250** ConfNo: **444524697** Stamp/Date:

Latest Start Date: **01 NOV 2019** Latest End Date: **01 NOV 2019** Std.Time: **1.0 Mins**

Visually inspect Elec & indication sys

Visually inspect electrical and indication system for satisfactory condition, pay particular attention to the followings:

A. Accessories components/sensores/pressure switches.
B. Electrical harness.
C. High tension ignitor leads and plugs
D. TGT harness and resistors
E. Fire detection sensor loops
F. AVM accelerometers
G. EEC, OPU and PCU and it's associated wiring.
H. Nose cowl wiring if nose cowl is fitted.

618050

18 NOV 2019

Work centre: **HKJCSENG** **ENGINE STRIP,BUILD,P-IC,EBU (PROCESS)** Plant: **HK01** Operation: **0260** ConfNo: **444524698** Stamp/Date:

Latest Start Date: **01 NOV 2019** Latest End Date: **01 NOV 2019** Std.Time: **1.0 Mins**

Clean all electrical connectors

All electrical connectors shall be property cleaned with acetone or OMat1/40 Isopropyi Alcohol.
Covered with plastic cap and positioned such that the connector ends to be faced downward to prevent from water trapping.
NOTE: DO NOT wire wrapping

618050

18 NOV 2019

Long Workscope Task List

Legacy Order:

Order:

Legacy Sales Order:

Work centre: **HKJCSENG** **ENGINE STRIP,BUILD,P-IC,EBU (PROCESS)** Plant: **HK01** Operation: **0270** ConfNo: **444524699** Stamp/Date:

Latest Start Date: **01 NOV 2019** Latest End Date: **01 NOV 2019** Std.Time: **1.0 Mins**

Visually inspect EEC, OPU & PCU suitcase

Visually inspect the EEC, OPU and PCU suitcase, ensure that the compartment containing these units is clean and dry.

18 NOV 2019

Work centre: **HKJCSENG** **ENGINE STRIP,BUILD,P-IC,EBU (PROCESS)** Plant: **HK01** Operation: **0280** ConfNo: **444524700** Stamp/Date:

Latest Start Date: **01 NOV 2019** Latest End Date: **01 NOV 2019** Std.Time: **1.0 Mins**

Visually inspect pneumatic system

Visually inspect pneumatic system for satisfactory condition, pay particular attention to the followings:

A. Pneumatic units, its ducts and gimbal joints

B. Starter ducting.

NOTE: AUTHORISATION HOLDER STAMP IS REQUIRED FOR THIS OPERATION.

606113

~~18 OCT 2019~~

18 NOV 2019

Work centre: **HKJCSENG** **ENGINE STRIP,BUILD,P-IC,EBU (PROCESS)** Plant: **HK01** Operation: **0290** ConfNo: **444524701** Stamp/Date:

Latest Start Date: **01 NOV 2019** Latest End Date: **01 NOV 2019** Std.Time: **1.0 Mins**

Inspect FOHE lower support linkage

Inspect the F.O.H.E. lower support linkage to ensure no frettage found.

S.W 606113

~~18 OCT 2019~~

18 NOV 2019

Long Workscope Task List

Legacy Order:

Order: 27677141

Legacy Sales Order:

Work centre: **HKJCSENG** **ENGINE STRIP,BUILD,P-IC,EBU (PROCESS)** Plant: **HK01** Operation: **0292** ConfNo: **444524726** Stamp/Date:

Latest Start Date: **01 NOV 2019** Latest End Date: **01 NOV 2019** Std.Time: **1.0 Mins**

Install QAD Ring

Apply silicone grease as required and install QAD ring with gasket to gearbox.
Torque tighten screws to ____/____lbfin.
Note: Keep grease out of dowel pin and bolt holes.
Ref: Figure 9-1, sheet 1 to 6)

S.I NG
60b113

Measuring Tool S/N: N/A SHORTAGE RELEASE

~~18 OCT 2019~~
18 NOV 2019

Work centre: **HKJCSENG** **ENGINE STRIP,BUILD,P-IC,EBU (PROCESS)** Plant: **HK01** Operation: **0294** ConfNo: **444524727** Stamp/Date:

Latest Start Date: **01 NOV 2019** Latest End Date: **01 NOV 2019** Std.Time: **1.0 Mins**

Install Check valve and unions

Install check valve (15, 25) and unions (55, 45) with seal ring on IDG.
Torque tighten unions and valve to ____/____lbfin.

Ref: Figure 9-1, sheet 1 to 6

S. NG
60 13

Measuring Tool S/N: N/A SHORTAGE RELEASE

~~18 OCT 2019~~
18 NOV 2019

Long Workscope Task List

Legacy Order:

Order:

Legacy Sales Order:

Work centre: **HKJCSENG** **ENGINE STRIP,BUILD,P-IC,EBU (PROCESS)** Plant: **HK01** Operation: **0296** ConfNo: **444524728** Stamp/Date:

Latest Start Date: **01 NOV 2019** Latest End Date: **01 NOV 2019** Std.Time: **1.0 Mins**

Install seal ring on IDG shaft

Install seal ring on IDG shaft and install IDG to gearbox with bracket(90) and QAD external torque bolt.
Torque tighten nut and torque bolt to ____/____ lbfin.

P/N: ____/____ S/N: ____/____

Ref: Figure 9-1, sheet 1 to 6

Measuring Tool S/N: ____N/A____ SHORTAGE RELEASE

S.W. 606.13 /

~~18 OCT 2019~~
18 NOV 2019

Work centre: **HKJCSENG** **ENGINE STRIP,BUILD,P-IC,EBU (PROCESS)** Plant: **HK01** Operation: **0300** ConfNo: **444524702** Stamp/Date:

Latest Start Date: **01 NOV 2019** Latest End Date: **01 NOV 2019** Std.Time: **1.0 Mins**

Replace IDG filter with seal rings

Replace IDG filter with seal rings, then install the cover and torque tighten cover and wirelocked.
ATA: 24-21-51
Chapter/Task/Subtask: 000-811, 400-811, 020-073, 420-073

N/A SHORTAGE RELEASE

S. 606.13 /

~~18 OCT 2019~~
18 NOV 2019

Long Workscope Task List

Legacy Order:

Order:

Legacy Sales Order:

Work centre: **HKJCSENG** **ENGINE STRIP,BUILD,P-IC,EBU (PROCESS)** Plant: **HK01** Operation: **0310** ConfNo: **444524703** Stamp/Date:

Latest Start Date: **01 NOV 2019** Latest End Date: **01 NOV 2019** Std.Time: **1.0 Mins**

Pressure fill IDG with specified oil

Pressure fill the IDG with specified oil, check oil level

ATA: 12-13-24

Chapter/Task/Subtask: 612-068, 612-808

N/A SHORTAGE RELEASE

P 143 EU 60611

~~18 OCT 2019~~

18 NOV 2019

Work centre: **HKJCSENG** **ENGINE STRIP,BUILD,P-IC,EBU (PROCESS)** Plant: **HK01** Operation: **0320** ConfNo: **444524704** Stamp/Date:

Latest Start Date: **01 NOV 2019** Latest End Date: **01 NOV 2019** Std.Time: **1.0 Mins**

Install electrical harness

A. Install the pressure fill valve and torque tighten to ____/____ lbfin.
B. Install overflow drain valve and torque tighten to ____/____ lbfin, wirelock.
C. Install all connecting oil tubes and torque tighten to ____/____ lbfin.
D. Install electrical harness and connect electrical connectors.

P 143 S.V 60 13

ATA: 24-21-51

Chapter/Task/Subtask: 420-064, 420-065

N/A SHORTAGE RELEASE

~~18 OCT 2019~~

18 NOV 2019

Long Workscope Task List

Legacy Order:

Order:

Legacy Sales Order:

Work centre: **HKJCSENG** **ENGINE STRIP,BUILD,P-IC,EBU (PROCESS)** Plant: **HK01** Operation: **0330** ConfNo: **444524705** Stamp/Date:

Latest Start Date: **01 NOV 2019** Latest End Date: **01 NOV 2019** Std.Time: **1.0 Mins**

IDG system inspection and servicing

A. Inspect chip detector for contamination
B. Replace scavenge filter, inspect removed filter for contamination.
C. Check condition of scavenge filter 'P' indicator.
D. Change IDG oil.
E. Re-torque check IDG QAD ring to _____/_____lbfin and wirelock bolts.

N/A SHORTAGE RELEASE

143 S.V 60613

~~18 OCT 2019~~
18 NOV 2019

Measuring Tool S/N: _____/_____

Work centre: **HKJCSENG** **ENGINE STRIP,BUILD,P-IC,EBU (PROCESS)** Plant: **HK01** Operation: **0332** ConfNo: **444524729** Stamp/Date:

Latest Start Date: **01 NOV 2019** Latest End Date: **01 NOV 2019** Std.Time: **1.0 Mins**

Install Hydraulic Pump

[ ] Vickers
[ ] Abex

Install hydraulic with gasket, seal rings, adapters and elbows to AGB.
Torque tighten nuts and adapters to _____/_____lbfin.

P/N:_____/_____S/N:_____/_____
Ref: Figure 13-1/2, sheet 1 to 4)

N/A SHORTAGE RELEASE

43/1 E 60613

~~18 OCT 2019~~
18 NOV 2019

Measuring Tool S/N: _____/_____

Long Workscope Task List

Legacy Order:

Order:

Legacy Sales Order:

Work centre: **HKJCSENG** **ENGINE STRIP,BUILD,P-IC,EBU (PROCESS)** Plant: **HK01** Operation: **0334** ConfNo: **444524730** Stamp/Date:

Latest Start Date: **01 NOV 2019** Latest End Date: **01 NOV 2019** Std.Time: **1.0 Mins**

Replace hydraulic pump drive shaft seal

Replace hydraulic pump drive shaft seal, torque tighten bolts and tubes. N/A SHORTAGE RELEASE

~~18 OCT 2019~~

18 NOV 2019

Long Workscope Task List

Legacy Order:

Order:

Legacy Sales Order:

Work centre: **HKJCSENG** **ENGINE STRIP,BUILD,P-IC,EBU (PROCESS)** Plant: **HK01** Operation: **0340** ConfNo: **444524706** Stamp/Date:

Latest Start Date: **01 NOV 2019** Latest End Date: **01 NOV 2019** Std.Time: **1.0 Mins**

Boroscope Inspection RecDoc (App3, 4)

Carried out boroscope inspection after engine test.

Record on RecDoc Appendix 3

[✓] Inspect **IP compressor** IAW EM72-00-00 Inspection/Check -40.

Remarks: NIL DEFECT FOUND

17 NOV 2019

[✓] Inspect **HP compressor** IAW EM72-00-00 Inspection/Check -41.

Remarks: NIL DEFECT FOUND

17 NOV 2019

[✓] Inspect **combustion chamber** IAW EM72-00-00 Inspection/Check -42.

Remarks: NIL DEFECT FOUND

K. LAI 601288

18 NOV 2019

[✓] Inspect **HP N.G.V.** IAW EM72-00-00 Inspection/Check -44.

Remarks: NIL DEFECT FOUND

18 NOV 2019

[✓] Inspect **HP turbine** IAW EM72-00-00 Inspection/Check -43.

Remarks: NIL DEFECT FOUND

17 NOV 2019

[✓] Inspect **IP turbine** IAW EM72-00-00 Inspection/Check -45.

Remarks: NIL DEFECT FOUND

P.T. CHAU 176075

17 NOV 2019

Long Workscope Task List

Legacy Order:

Order:

Legacy Sales Order:

[✓] Inspect **LP turbine** IAW EM72-00-00 Inspection/Check -46, TR_OIN_75 Issue 1 and TV175796 Issue 1.

Record the TR_OIN_75 Issue 1 Results into Appendix 4
Remarks: NIL DEFECT FOUND

18 NOV 2019

Ref. TR_OIN_75 Issue 1
ATA: 72-00-00
Chapter/Task/Subtask: 200-840, 200-841, 200-842, 200-843, 200-844, 200-845, 200-846

PRT Type	Description	Identifier	Qty	UoM
Document	T8_RD_Eng_Test_Final_Boroscope_App3	10000085195 REC	1	NPT
Document	Trent800_OIN75_Appendix 01 (After Test)	10000088684 REC	1	NPT

Work centre: **HKJCSENG** **ENGINE STRIP,BUILD,P-IC,EBU (PROCESS)** Plant: **HK01** Operation: **0350** ConfNo: **[illegible]707** Stamp/Date:

Latest Start Date: **01 NOV 2019** Latest End Date: **01 NOV 2019** Std.Time: **1.0 Mins**

Wash Fan blades
Wash Fan blades

18 NOV 2019 ~~18 OCT 2019~~

Long Workscope Task List

Legacy Order:

Order:

Legacy Sales Order:

Work centre: **HKJCSENG** **ENGINE STRIP,BUILD,P-IC,EBU (PROCESS)** Plant: **HK01** Operation: **0360** ConfNo: **444524708** Stamp/Date:

Latest Start Date: **01 NOV 2019** Latest End Date: **01 NOV 2019** Std.Time: **1.0 Mins**

Install boroscope plugs

Apply jointing compound and install boroscope plugs to the not removed modules, torque tighten bolts to 40, 100, 230 lbfin.

OMat No.: 4/62 Batch No.: 0006072620

Measuring Tool S/N: MC0197, MC0554

ATA: 72-00-00

W. Al
601288

18 NOV 2019

Long Workscope Task List

Legacy Order:

Order:

Legacy Sales Order:

Work centre: **HKJCSENG** **ENGINE STRIP,BUILD,P-IC,EBU (PROCESS)** Plant: **HK01** Operation: **0370** ConfNo: **444524709** Stamp/Date:

Latest Start Date: **01 NOV 2019** Latest End Date: **01 NOV 2019** Std.Time: **1.0 Mins**

Inspect boroscope plugs

Inspect to ensure all boroscope plugs are correctly installed.

A. IP Compressors (3ea)
B. HP Compressors (5ea)
C. Combustion liner (8ea)
D. HP Turbine 14mm plug (1ea)
E. HP Turbine front (1ea)
F. IP Turbine front and rear (2ea)
G. LP Turbine (4 ea)

1st Inspection Time: 05:30 Date: 18 NOV 2019 1st Inspection Stamp :

2nd Inspection Time: 05:35 Date: 18 NOV 2019 2nd Inspection Stamp :

NOTE: AUTHORIZATION HOLDER STAMP IS REQUIRED FOR THIS OPERATION

ATA: 72-00-00

Long Workscope Task List

Legacy Order:

Order:

Legacy Sales Order:

Work centre: **HKJCSENG** **ENGINE STRIP,BUILD,P-IC,EBU (PROCESS)** Plant: **HK01** Operation: **0380** ConfNo: **444524710** Stamp/Date:

Latest Start Date: **01 NOV 2019** Latest End Date: **01 NOV 2019** Std.Time: **1.0 Mins**

Install manual turning access cover

Install manual turning access cover and torque tighten bolts to 135 lbfin.

Measuring Tool S/N: MC0197

W.K 601 18 NOV 2019

Work centre: **HKJCSENG** **ENGINE STRIP,BUILD,P-IC,EBU (PROCESS)** Plant: **HK01** Operation: **0390** ConfNo: **444524711** Stamp/Date:

Latest Start Date: **01 NOV 2019** Latest End Date: **01 NOV 2019** Std.Time: **1.0 Mins**

Inspect manual turning access cover

Inspect to ensure the manual turning access cover is correctly installed.

1st Inspection Time: 05:45 Date: 18 NOV 2019 1st Inspection Stamp :

2nd Inspection Time: 05:50 Date: 18 NOV 2019 2nd Inspection Stamp :

NOTE: AUTHORIZATION HOLDER STAMP IS REQUIRED FOR THIS OPERATION

Long Workscope Task List

Legacy Order:

Order:

Legacy Sales Order:

Work centre: **HKJCSENG** **ENGINE STRIP,BUILD,P-IC,EBU (PROCESS)** Plant: **HK01** Operation: **0400** ConfNo: **444524712** Stamp/Date:

Latest Start Date: **01 NOV 2019** Latest End Date: **01 NOV 2019** Std.Time: **1.0 Mins**

Ensure VIGV system is fully closed

NOTE: AUTHORIZATION HOLDER STAMP IS REQUIRED FOR THIS OPERATION.

18 NOV 2019

Work centre: **HKJCSENG** **ENGINE STRIP,BUILD,P-IC,EBU (PROCESS)** Plant: **HK01** Operation: **0402** ConfNo: **444524731** Stamp/Date:

Latest Start Date: **01 NOV 2019** Latest End Date: **01 NOV 2019** Std.Time: **1.0 Mins**

Install inlet cowl

1) Install inlet cowl to engine with lower EEC Cooling tube, anti-ice duct and P2T2 static pressure tube connected. Torque bolts and nuts as required.

2) Connect wire bundle connectors as required.

N/A

Ref: Figure 31-1, sheet 1 to 8)

SHORT RELEASED

18 NOV 2019

Work centre: **HKJCSENG** **ENGINE STRIP,BUILD,P-IC,EBU (PROCESS)** Plant: **HK01** Operation: **0410** ConfNo: **444524713** Stamp/Date:

Latest Start Date: **01 NOV 2019** Latest End Date: **01 NOV 2019** Std.Time: **1.0 Mins**

Inspect the fairings

Inspect the fairings which are to be installed, pay perticular attention to the following.

Ensure the seal anchor nuts, helicoils and mounting bosses are in satisfactory condition.

18 NOV 2019

Long Workscope Task List

Legacy Order:

Order: 2

Legacy Sales Order:

Work centre: **HKJCSENG** **ENGINE STRIP,BUILD,P-IC,EBU (PROCESS)** Plant: **HK01** Operation: **0420** ConfNo: **444524714** Stamp/Date:

Latest Start Date: **01 NOV 2019** Latest End Date: **01 NOV 2019** Std.Time: **1.0 Mins**

Ensure there is sufficient clearance

Ensure that there is sufficient clearance between the fuel tube and the radial drive tube.

Ref. PAP No. PDSX-2147

18 NOV 2019

Work centre: **HKJCSENG** **ENGINE STRIP,BUILD,P-IC,EBU (PROCESS)** Plant: **HK01** Operation: **0430** ConfNo: **444524715** Stamp/Date:

Latest Start Date: **01 NOV 2019** Latest End Date: **01 NOV 2019** Std.Time: **1.0 Mins**

Final inspect the core engine

Final inspect the core engine and it's components ducts, pinpelines, clips --- etc. for satisfactory condition and security. Ensure all fuel and

oil pipelines have sufficient clearance and no chafing, fretting or damage has occurred under clips or adjacent components and structure.

Use mirror or suitable optical aids where necessary.

CAUTION: A. Min. clearance of 0.100" should be achieved between tubes.

B. Min. clearance of 0.25" should be achieved between LH fuel manifold & HP/IP bearing oil return tube.

C. No. foreign object is left behind on the area which is to be panel up.

D. The VIGV system is closed.

1st Inspection Time: 06:20 Date: 18 NOV 2019 1st Inspection Stamp :

2nd Inspection Time: 06:30 Date: 18 NOV 2019 2nd Inspection Stamp :

NOTE: AUTHTORIZATION HOLDER STAMP IS REQUIRED FOR THIS OPERATION

Long Workscope Task List

Legacy Order:

Order:

Legacy Sales Order:

Work centre: **HKJCSENG** **ENGINE STRIP,BUILD,P-IC,EBU (PROCESS)** Plant: **HK01** Operation: **0450** ConfNo: **444524716** Stamp/Date:

Latest Start Date: **01 NOV 2019** Latest End Date: **01 NOV 2019** Std.Time: **1.0 Mins**

Visually inspect fairings

Visually inspect to ensure all fairings are in satisfactory condition, refit all fairings and torque tighten bolts to 135 lbfin.

Measuring Tool S/N: M0187

18 NOV 2019

Work centre: **HKJCSENG** **ENGINE STRIP,BUILD,P-IC,EBU (PROCESS)** Plant: **HK01** Operation: **0460** ConfNo: **444524717** Stamp/Date:

Latest Start Date: **01 NOV 2019** Latest End Date: **01 NOV 2019** Std.Time: **1.0 Mins**

Duplicate inspect the fairings

1st Inspection Time: 06:50 Date: 18 NOV 2019 1st Inspection Stamp : W. K. LAI 601286

2nd Inspection Time: 07:00 Date: 18 NOV 2019 2nd Inspection Stamp : N. H. LAU 602559

NOTE: AUTHORIZATION HOLDER STAMP IS REQUIRED FOR THIS OPERATION

Long Workscope Task List

Legacy Order:

Order:

Legacy Sales Order:

Work centre: **HKJCSENG** **ENGINE STRIP,BUILD,P-IC,EBU (PROCESS)** Plant: **HK01** Operation: **0470** ConfNo: **444524718** Stamp/Date:

Latest Start Date: **01 NOV 2019** Latest End Date: **01 NOV 2019** Std.Time: **1.0 Mins**

Inspect LPT Module Struts at Location 4

Visually inspect the LP Turbine Module Struts at Location 4.

Position 1: NO CRACK Position 2: NO CRACK Position 3: NO CRACK Position 4: 0.360" CRACK AT INNER L/E.
Position 5: 0.332" CRACK AT INNER L/E. Position 6: 0.423" CRACK FOUND AT INNER L/E Position 7: 0.74" CRACK FOUND AT INNER L/E Position 8: NIL
Position 9: NIL Position 10: NIL Position 11: 0.625" CRACK FOUND AT INNER L/E Position 12: NIL

Limits : /

Remarks: CONDITION SATISFACTORY.

143
S.I NG
60.13

18 NOV 2019

Ref. to Fig. 72-00-00-990-020
ATA: 72-00-00
Chapter/Task/Subtask: 220-047

Long Workscope Task List

Legacy Order:

Order: _

Legacy Sales Order:

Work centre: **HKJCSENG** **ENGINE STRIP,BUILD,P-IC,EBU (PROCESS)** Plant: **HK01** Operation: **0475** ConfNo: **444524737** Stamp/Date:

Latest Start Date: **01 NOV 2019** Latest End Date: **01 NOV 2019** Std.Time: **1.0 Mins**

Complete the LPT Case proforma (RecDoc)

Complete the LPT Exhaust Case Proforma
(TS/0209/14/EL)

18 NOV 2019

PRT Type	Description	Identifier	Qty	UoM
Document	T800_LPT_Exhaust_Case_TS-0209-14-EL	10000163341 REC	1	EA

Work centre: **HKJCSENG** **ENGINE STRIP,BUILD,P-IC,EBU (PROCESS)** Plant: **HK01** Operation: **0480** ConfNo: **444524719** Stamp/Date:

Latest Start Date: **01 NOV 2019** Latest End Date: **01 NOV 2019** Std.Time: **1.0 Mins**

Measure fan blade tip clearance (App.4)

Measure and record fan blade tip clearance at 8 equally positions.
Record on RecDoc Appendix 4

Measuring Tool S/N: MCI152 , MCI154.

18 NOV 2019

ATA: 72-31-11
Chapter/Task/Subtask: 420-010

PRT Type	Description	Identifier	Qty	UoM
Document	T8_RD_Eng_Test_Final_FanTrack_App4	10000085196 REC	1	NPT

Long Workscope Task List

Legacy Order:

Order:

Legacy Sales Order:

Work centre: **HKJCSENG** **ENGINE STRIP,BUILD,P-IC,EBU (PROCESS)** Plant: **HK01** Operation: **0490** ConfNo: **444524720** Stamp/Date:

Latest Start Date: **01 NOV 2019** Latest End Date: **01 NOV 2019** Std.Time: **1.0 Mins**

Inspect front and rear mounts

Inspect and ensure front and rear mounts are in good condition before engine release.

18 NOV 2019

Work centre: **HKJCSENG** **ENGINE STRIP,BUILD,P-IC,EBU (PROCESS)** Plant: **HK01** Operation: **0500** ConfNo: **444524721** Stamp/Date:

Latest Start Date: **01 NOV 2019** Latest End Date: **01 NOV 2019** Std.Time: **1.0 Mins**

Inspect fan blade att. lining L/E

Visually inspect to ensure the fan blade rotor path attrition lining leading edge step of tip rub **MUST NOT BE DRESSED.**

18 NOV 2019

Work centre: **HKJCSENG** **ENGINE STRIP,BUILD,P-IC,EBU (PROCESS)** Plant: **HK01** Operation: **0510** ConfNo: **444524722** Stamp/Date:

Latest Start Date: **01 NOV 2019** Latest End Date: **01 NOV 2019** Std.Time: **1.0 Mins**

Clean the fan case

Clean the fan case and it's associated electrical cables plugs, tubings, pipings and ducting.

Condition :

CONDITION SATISFACTORY

18 NOV 2019

Long Workscope Task List

Legacy Order:

Order:

Legacy Sales Order:

Work centre: **HKJCSENG** **ENGINE STRIP,BUILD,P-IC,EBU (PROCESS)** Plant: **HK01** Operation: **0520** ConfNo: **444524723** Stamp/Date:

Latest Start Date: **01 NOV 2019** Latest End Date: **01 NOV 2019** Std.Time: **1.0 Mins**

Carry out in-build torque.

Carry out in-build torque to anchor nut(s) by finger tight method. Use a new and good condition bolt/screw to turn into the anchor nut(s) by fingers,

then check the bolt/screw thread to ensure it does NOT PERCEIVE on the other side of the anchor nut. Otherwise replace the anchor nut(s).

Anchor nut replacement [—] Yes, number of replaced : ___

[✓] No, all in good condition.

18 NOV 2019

Long Workscope Task List

Legacy Order:

Order:

Legacy Sales Order:

Work centre: **HKJCSENG** **ENGINE STRIP,BUILD,P-IC,EBU (PROCESS)** Plant: **HK01** Operation: **0530** ConfNo: **444524724** Stamp/Date:

Latest Start Date: **01 NOV 2019** Latest End Date: **01 NOV 2019** Std.Time: **1.0 Mins**

Transfer engine to transportation stand

Transfer Engine from engine stand onto appropriated transportation stand.

CAUTION:
YOU MUST MAKE SURE THAT THE ENGINE DRAINS MAST IS NOT INSTALLED ON THE ENGINE BEFORE YOU PUT THE ENGINE INTO THE MULTI PURPOSE STAND. DAMAGE TO THE ENGINE WILL OCCUR IF THE ENGINE DRAINS MAST IS NOT REMOVED.

YOU MUST REMOVE THE WET START FUEL DRAINS TUBE BEFORE YOU INSTALL THE ENGINE INTO THE MULTI-PURPOSE STAND. DAMAGE TO THE ENGINE WILL OCCUR IF THE WET START FUEL DRAINS TUBE IS NOT REMOVED.

YOU MUST BE CAREFUL DURING THE REMOVAL OF THE TRUNNION AND THE HOUSING. THIS WILL HELP PREVENT THE DAMAGE TO THE HANDLING BOSS OF THE LP TURBINE EXHAUST CASE ASSEMBLY. IT IS IMPORTANT NOT TO DAMAGE THE INTERNAL DIAMETER AND THE MATING FACE OF THE HANDLING BOSS.

Note: Make sure the trunnions and the housing assemblies are clean before installation.

NOTE: AUTHORIZATION HOLDER STAMP IS REQUIRED FOR THIS OPERATION.

18 NOV 2019

ATA: 71-00-00
Chapter/Task/Subtask: 000-801

Long Workscope Task List

Legacy Order:

Order: 27677141

Legacy Sales Order:

Work centre: **HKJCSENG** **ENGINE STRIP,BUILD,P-IC,EBU (PROCESS)** Plant: **HK01** Operation: **0540** ConfNo: **444524732** Stamp/Date:

Latest Start Date: **01 NOV 2019** Latest End Date: **01 NOV 2019** Std.Time: **1.0 Mins**

Duplicate inspection powerplant

Final inspect the powerplant/core engine and it's components, ducts, pipelines, clips etc. for satisfactory condition and security.

Ensure all fuel and oil pipelines have sufficient clearances and no chafing, fretting or damage has occurred under clips or adjacent components and structure.

Use mirror or suitable optical aids where necessary.

Caution:

a) Minimum clearance of 0.250" should be achieved between HP Fuel manifold and HP/IP bearing oil return tube.

b) For the remaining tubes, minimum clearance of 0.100" should be achieved.

1st Inspection Time: 14:20 Date: 19 NOV 2019 1st Inspection Stamp

2nd Inspection Time: 16:20 Date: 19 NOV 2019 2nd Inspection Stamp :

NOTE: AUTHORIZATION HOLDER STAMP IS REQUIRED FOR THIS OPERATION

Long Workscope Task List

Legacy Order:

Order: 27677141

Legacy Sales Order:

Work centre: **HKJCSENG** **ENGINE STRIP,BUILD,P-IC,EBU (PROCESS)** Plant: **HK01** Operation: **0550** ConfNo: **444524735** Stamp/Date:

Latest Start Date: **01 NOV 2019** Latest End Date: **01 NOV 2019** Std.Time: **1.0 Mins**

Rec inspection/open items (App07)

Record repetitive inspection / open items are to be actioned / completed at engine installation in RecDoc (Appendix 07).

NOTE: AUTHORIZATION HOLDER STAMP IS REQUIRED FOR THIS OPERATION

19 NOV 2019

PRT Type	Description	Identifier	Qty	UoM
Document	Trent800_Engine_Open_Items	10000083792 REC	1	NPT

Long Workscope Task List

Legacy Order:

Order:

Legacy Sales Order:

Work centre: **HKWCHECK** **WORK ORDER CHECK** Plant: **HK01** Operation: **9900** ConfNo: **444524736** Stamp/Date:
Latest Start Date: **01 NOV 2019** Latest End Date: **01 NOV 2019** Std.Time: **1.0 Mins**
Final Inspection

Ensure that:
a) The applicable reworked area(s) and internal passages are:
(i) Clear of all tools, equipment and foreign material (including debris, grit and contaminant) after completion of maintenance.
(ii) In acceptable condition with adequate protection.
b) All the required tasks are satisfactorily completed and properly signed off.

Record the manual revision (TL):

Always use the latest revision, unless otherwise specified in applicable Workscope Instructions or Repair Instructions.

[✓] Latest revision (TL 96), or
[ ] Customer specified revision (TL).

This complies with the above TL as:

[✓] The TL is the same as in the Manual Revision Indicator within this WSO, or

[ ] The TL is different from the Manual Revision Indicator within this WSO:

[ ] The contents are confirmed NOT AFFECTED by the relevant Manual Revision Indicator (TL no. /Rev no.)
TL /Rev on HAESL Portal, or

[ ] The contents are confirmed AFFECTED by the relevant Manual Revision Indicator (TL no. /Rev no.)
TL /Rev on HAESL Portal. TS reviewed as follows:
TS Review Results:
This can be released to the above TL.
TS Clearance (Stamp/Signature/Date):

19 NOV 2019

Long Workscope Task List

Legacy Order:

Order:

Legacy Sales Order:

Work centre: **HKGTI** **GTI STATEMENT** Plant: **HK01** Operation: **9999** ConfNo: **444524734** Stamp/Date:
Latest Start Date: **01 NOV 2019** Latest End Date: **01 NOV 2019** Std.Time: **1.0 Mins**
Certification

Certification made IAW HAESL GTI-P-002-88

NOTE: Only Authorization Holder can sign off this operation.

085
K. 3
60 06

19 NOV 2019

End of Report

Document Title:	Recording Document - RB211_Trent 800_AfterTest_Boro_Appendix 3
Document Issue No.:	01
Sales Order No.:	0(
Engine/Module Type:	TR6NT884
Customer:	ROLLS-ROYCE PLC
Module No.:	
Engine No.:	51340

Engine Test (Trent 800)

Appendix 3 - Boroscope Inspection Card After Engine Test

Stage	Quantity	Results of IP Compressor Rotor Boroscope Inspection (State EM limit if defect found)	Inspection iaw EM		Stamp/Name/Date
			Accept	Reject	
1	45 Blades	NIL DEFECT FOUND	✓	—	17 NOV 2019
2	49 Blades	NIL DEFECT FOUND	✓	—	17 NOV 2019
3	58 Blades	NIL DEFECT FOUND	✓	—	17 NOV 2019
4	53 Blades	NIL DEFECT FOUND	✓	—	17 NOV 2019
5	53 Blades	NIL DEFECT FOUND	✓	—	17 NOV 2019
6	57 Blades	NIL DEFECT FOUND	✓	—	17 NOV 2019
7	53 Blades	NIL DEFECT FOUND	✓	—	17 NOV 2019
8	49 Blades	NIL DEFECT FOUND	✓	—	17 NOV 2019

Document Title:	Recording Document - RB211_Trent 800_AfterTest_Boro_Appendix 3
Document Issue No.:	01
Sales Order No.:	
Engine/Module Type:	TR6NT884
Customer:	ROLLS-ROYCE PLC
Module No.:	
Engine No.:	51340

Engine Test (Trent 800)

Appendix 3 - Boroscope Inspection Card After Engine Test

Stage	Quantity	Results of HP Compressor Rotor Boroscope Inspection (State EM limit if defect found)	Inspection iaw EM		Stamp/Name/Date
			Accept	Reject	
1	59 Blades	NIL DEFECT FOUND	✓	—	17 NOV 2019
2	82 Blades	NIL DEFECT FOUND	✓	—	17 NOV 2019
3	94 Blades	NIL DEFECT FOUND	✓	—	17 NOV 2019
4	92 Blades	No Access Hole for Insp'n	—	—	17 NOV 2019
5	76 Blades	NIL DEFECT FOUND	✓	—	17 NOV 2019
6	74 Blades	NIL DEFECT FOUND	✓	—	17 NOV 2019

Document Title:	Recording Document - RB211_Trent 800_AfterTest_Boro_Appendix 3
Document Issue No.:	01
Sales Order No.:	3
Engine/Module Type:	NT884
Customer:	ROLLS ROYCE PLC
Module No.:	
Engine No.:	51340

Engine Test (Trent 800)

Appendix 3 - Boroscope Inspection Card After Engine Test

Components Checked	Results of Combustion Chamber	Inspection iaw EM		Stamp/Name/Date
		Accept	Reject	
Rear nner discharge nozzle	NIL DEFECT FOUND	✓	—	18 NOV 2019
Inner wall	NIL DEFECT FOUND	✓	—	18 NOV 2019
Dilution chutes (inner wall)	NIL DEFECT FOUND	✓	—	18 NOV 2019
Cooling ring lips (inner wall)	NIL DEFECT FOUND	✓	—	18 NOV 2019
Heatshield	NIL DEFECT FOUND	✓	—	18 NOV 2019
Fuel spray nozzle	NIL DEFECT FOUND	✓	—	18 NOV 2019

Document Title:	Recording Document - RB211_Trent 800_AfterTest_Boro_Appendix 3
Document Issue No.:	01
Sales Order No.:	
Engine/Module Type:	TRENT884
Customer:	ROLLS ROYCE PLC
Module No.:	
Engine No.:	51340

Engine Test (Trent 800)

Appendix 3 - Boroscope Inspection Card After Engine Test

Components Checked	Results of Combustion Chamber	Inspection iaw EM		Stamp/Name/Date
		Accept	Reject	
Meter panel	NIL DEFECT FOUND	✓	—	18 NOV 2019
Burner seal	NIL DEFECT FOUND	✓	—	18 NOV 2019
Dulution chutes (outer wall)	NIL DEFECT FOUND	✓	—	18 NOV 2019
Cooling ring lips(outer wall)	NIL DEFECT FOUND	✓	—	18 NOV 2019
Outer wall	NIL DEFECT FOUND	✓	—	18 NOV 2019
Rear outer discharge nozzle	NIL DEFECT FOUND	✓	—	18 NOV 2019

Document Title:	Recording Document - RB211_Trent 800_AfterTest_Boro_Appendix 3
Document Issue No.:	01
Sales Order No.:	0(
Engine/Module Type:	TRENT884
Customer:	ROLLS-ROYCE PLC
Module No.:	
Engine No.:	51340

Engine Test (Trent 800)

Appendix 3 - Boroscope Inspection Card After Engine Test

Components Checked	Results of Combustion, NGV'S and Turbine Boroscope Inspection (State EM limit if defect found)		Inspection iaw EM Accept	Inspection iaw EM Reject	Stamp/Name/Date
Combustion Liners	NIL DEFECT FOUND		✓	—	18 NOV 2019
Burner Heads & Heat Shield	NIL DEFECT FOUND		✓	—	18 NOV 2019
HP Nozzle Guide Vanes	NIL DEFECT FOUND		✓	—	18 NOV 2019
HP Turbine Blade Interlocks	NIL DEFECT FOUND		✓	—	18 NOV 2019
HP Turbine Blades	92 Blades	NIL DEFECT FOUND	✓	—	17 NOV 2019
IP Turbine Blades	126 Blades	NIL DEFECT FOUND	✓	—	17 NOV 2019

Document Title:	Recording Document - RB211_Trent 800_AfterTest_Boro_Appendix 3
Document Issue No.:	01
Sales Order No.:	3
Engine/Module Type:	TRENT884
Customer:	ROLLS ROYCE PLC
Module No.:	
Engine No.:	51340

Engine Test (Trent 800)

Appendix 3 - Boroscope Inspection Card After Engine Test

Components Checked	Quantity	Results of LP Turbine Boroscope Inspection (State EM limit if defect found)	Inspection iaw EM: Accept	Inspection iaw EM: Reject	Stamp/Name/Date
LP1 Turbine Blades	140 Blades	NIL DEFECT FOUND	✓	—	18 NOV 2019
LP2 Turbine Blades	110 Blades	NIL DEFECT FOUND	✓	—	18 NOV 2019
LP3 Turbine Blades	80 Blades	NIL DEFECT FOUND	✓	—	18 NOV 2019
LP4 Turbine Blades	76 Blades	NIL DEFECT FOUND	✓	—	18 NOV 2019
LP5 Turbine Blades	76 Blades	NIL DEFECT FOUND	✓	—	18 NOV 2019

Document Title:	Recording Document - RB211_Trent 800_AfterTest_Boro_Appendix 3
Document Issue No.:	01
Sales Order No.:	2
Engine/Module Type:	TRENT884
Customer:	ROLLS-ROYCE PLC
Module No.:	
Engine No.:	51340

Engine Test (Trent 800)

Appendix 3 - Boroscope Inspection Card After Engine Test

	HR Stamp/Name/Date
Rotation of HP System satisfactory	CHAU 075 17 NOV 2019
Rotation of IP System satisfactory	CHAU 075 17 NOV 2019
Rotation of LP System satisfactory	18 NOV 2019
Exhaust Plug inspected and satisfactory N/A, SHORT RELEASE	W. K. 6012 18 NOV 2019
LP Fan visually inspected free from damage and debris	28 18 NOV 2019
Rear of LP 5 Turbine visually inspected and free from damage and debris	W. K. 601288 18 NOV 2019

Document Title:	Recording Document - Trent 800_OIN75_Intrascope Inspection
Document Issue No.:	01
Sales Order No.:	6 3 17
Engine/Module Type:	TRENT884
Customer:	ROLLS-ROYCE PLC
Module No.:	
Engine No.:	51340

OIN 75 Inspection of LP Turbine Stage 1 Blade Outer Shroud Vibration Dampers

Appendix 04 - Table for recording results of LPT Stage 1 balde vibration damper boroscope inspection (After Engine Test)

Record the results in the following table and pass to RR FSO via TS

Engine Serial Number : _____

Operator : _____

LPT Module Serial Number : _____

LPT Module Life Information (since new) : _____ (Hours) _____ (Cycles)

LPT Module Life Information (since refurb) : _____ (Hours) _____ (Cycles)

	A	B	C	D
LPT blade pair	Holed Shrouds (Y = Holed, N = Not Holed)	Missing Vibration Dampers (Y = Missing, N = No Missing)	Broken Dampers (Y = Broken, N = Not Broken)	Tight gaps - Damper state unknown (✓ = Tight Gaps, X= Not a Tight Gaps)
1				
2				
3				
4				
5				
6				
7				
8				
9				
10				
11				
12				
13				
14				
15				
16				
17				
18				
19				
20				
21			POST	
22			SB 72-F382.	
23				
24				
25				
26				
27				
28				
29				
30				
31				

19 NOV 2019

Document Title:	Recording Document - Trent 800_OIN75_Intrascope Inspection
Document Issue No.:	01
Sales Order No.:	006
Engine/Module Type:	TRENT884
Customer:	ROLLS-ROYCE PLC
Module No.:	
Engine No.:	51340

LPT blade pair	Holed Shrouds (Y = Holed, N = Not Holed)	Missing Vibration Dampers (Y = Missing, N = No Missing)	Broken Dampers (Y = Broken, N = Not Broken)	Tight gaps - Damper state unknown (✓ = Tight Gaps, X= Not a Tight Gaps)
32				
33				
34				
35				
36				
37				
38				
39				
40				
41				
42				
43				
44				
45				
46				
47				
48				
49				
50				
51				
52				
53				
54				
55				
56			post SB 72-P3d2.	
57				
58				
59				
60				
61				
62				
63				
64				
65				
66				
67				
68				
69				
70				

HR Stamp/Name/Date

K.C. 600

19 NOV 2019

Document Title:	Recording Document - RB211_Trent 800_FinalFanTrack_Appendix 4
Document Issue No.:	01
Sales Order No.:	
Engine/Module Type:	TRENT884
Customer:	ROLLS-ROYCE PLC
Module No.:	
Engine No.:	51340

ENGINE TEST (Trent 800)

Appendix 4 - Fan Track LPC Blade Tip Clearance Report After Engine Test

Ref - T800 EM Task 72-31-11-420-801

Blade Tip Clearance - BDC

Blades	L/E (mm)	T/E (mm)
1	2.10	5.25
2	2.00	5.00
3	2.00	5.10
4	1.90	5.00
5	2.00	5.25
6	1.70	5.10
7	1.90	5.55
8	2.20	5.25
9	2.15	5.35
10	1.95	5.35
11	1.95	5.30
12	1.85	5.25
13	1.85	5.30
14	1.95	5.05
15	1.85	5.00
16	1.95	5.20
17	1.90	5.30
18	1.85	5.00
19	1.85	5.30
20	1.50	5.55
21	1.80	5.25
22	1.90	4.95
23	1.80	5.00
24	1.70	5.05
25	1.80	5.10
26	1.90	5.05

Limits: L/E: (0.755-3.085)mm
T/E: (4.490-6.820)mm

Record the longest blade position: L/E: POS# 20
T/E: POS# 22

Use the longest blade to measure actual tip clearance

Blade Tip Clearance - Actual

Position	L/E	T/E
1	1.50 mm	4.95 mm
2	1.80 mm	5.05 mm
3	1.95 mm	5.25 mm
4	1.95 mm	5.35 mm
5	2.15 mm	5.30 mm
6	1.95 mm	5.20 mm
7	1.95 mm	5.05 mm
8	1.80 mm	5.00 mm

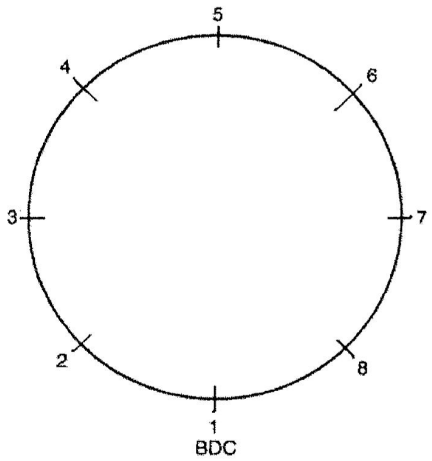

Results: [✓] - within the limit

[ ] - exceed the limits, proceed FRSG017

Inspected by: _____ Date: 18 NOV 2019
(DF Stamp and signatory)

Document Title:	Recording Document - RB211_TRENT800_ENG_Appendix7
Document Issue No.:	01
Sales Order No.:	0
Engine/Module Type:	TRENT884
Customer:	ROLLS-ROYCE PLC
Module No.:	
Engine No.:	51340

Trent800 Engine Repectitive Inspection / Open Items

Appendix 7 - Trent 800_Engine Repectitive Inspection / Open Items

This is a QUALITY GATE. The recordings are critical build data and may be analysed by the Technical Services Department if required.

The following repectitive inspections / open items are to be actioned / completed at engine Installation.

1) CARRY OUT TEST NO. 2 — FUEL & OIL LEAK CHECK ON LP FUEL FILTER, OIL PRESSURE FILTER AND OIL SCAVENGE FILTER AREA DUE TO REPLACE AFTER ENGINE IAW. BOEING 777 AMM TASK: 71-00-00-800-837-ROC
2) RE-INSTALL SHORTAGE ITEM IAW. SHORTAGE LIST S/N: EASA0010711/1.
3) CARRY OUT LEAK CHECK ON OIL PUMP MCD HOUSING BLANKING PLATES. (DUE TO THE BLANKING PLATES HAVE BEEN REMOVED FOR INLET SCREEN CONTAMINATION CHECK)
4) RE-INSTALL THE REAR VIBRATION TRANSDUCER DUE TO HINDERING OF ENGINE ROLLOVER STAND.
5) CARRY OUT OIL SERVICING ON ENGINE AFTER INSTALLATION.

HR Stamp/Name/Date

08

19 NOV 2019

SPECIAL INSPECTION REQUIREMENT

ENGINE S/N: 51340 **CUSTOMER:**

MODULE : 08/FM0111 **PROFORMA No :** TS/0209/14/EL

DATE: 18 NOV 2019

item No.	Action – Record all findings	Accomplished By
1	**IMPORTANT:** Please return the result to HR TS(EOH) AS SOON AS POSSIBLE. If you need any assistance, please contact HR TS(EOH).	XXXX
2	Fill in the ENGINE SERIAL NO., MODULE SERIAL NO., & DATE on the top of each sheet.	18 NOV 2019
3	Record the condition of the LPT Exhaust Case (EIPC Ref.: 72-52-51-03-300) at strut/vane as per Appendix A.	18 NOV 2019
4	Inspect the rear outer flange of the LPT Exhaust Case. Record the strut/vane position and the dimensions (L x W x D) for any damage. *NOTE: Typical gall marks on flange front / rear face & around bolt holes.* Finding(s): NIL	18 NOV 2019
5	Record all concession / marking on the Exhaust Case Assembly. *NOTE: Typically on mounting bosses at 3 & 9 o'clock positions.* Finding(s): FRE10405/A, ISSUE A, S/N 00159-01, MSRR 7132, PCC-LPC, (P) (X), FRSH119, FM0048, F0048, FRS3253, FK31446 ASSY, ISS A S/N 00159-01, NMSB72-AG644,	18 NOV 2019
6	Upon completion, please return this proforma to HR TS(EOH).	19 NOV 2019

FORM02050

SPECIAL INSPECTION REQUIREMENT

ENGINE S/N: 51340 **CUSTOMER.**

MODULE : 08/FM0111 **PROFORMA No :** TS/0209/14/EL

DATE: 18 NOV 2019

Appendix A

Inspect the condition of the 12-off Struts/Vanes (Figure A-1) at the radii areas:
i.e. 4-off positions on each strut (Figure A-2):
(A) inner leading edge,
(B) inner trailing edge,
(C) outer trailing edge,
(D) outer leading edge

Record the following information, if applicable, on Table 1:

1) No. of crack;
2) Maximum crack length; and
3) If stop drill hole present,

Confirm if the above findings are within EM limit or not.

NOTE: Figures A-3 & A-4 indicates the area where stop drilling is NOT permitted and the strut / vane numbers.

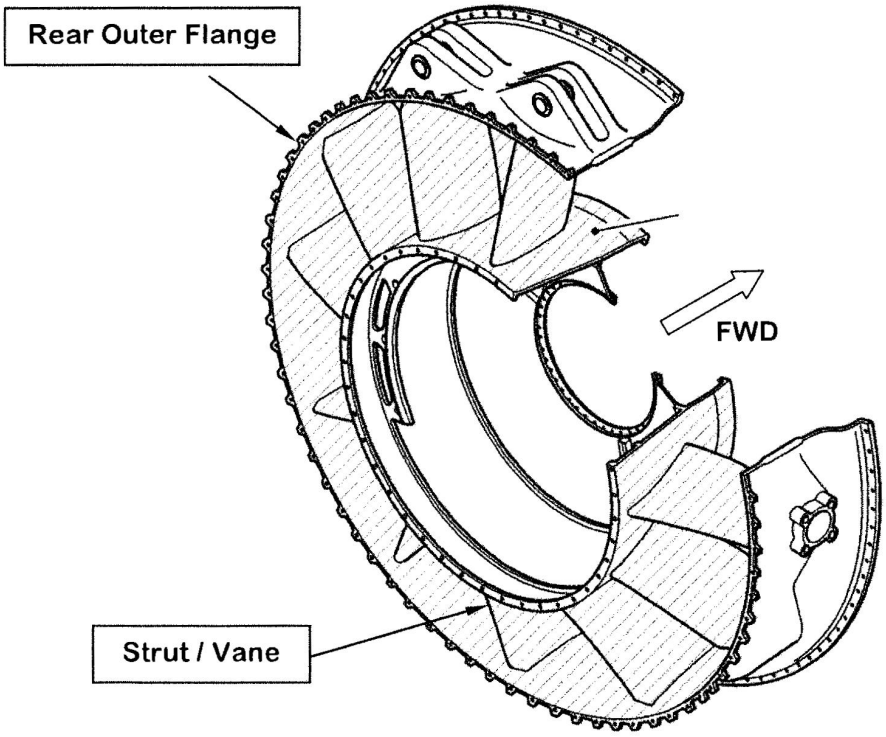

Figure A-1: Typical view showing areas to be inspected on LPT Exhaust case – applicable to all workscope levels

FORM02050

SPECIAL INSPECTION REQUIREMENT

ENGINE S/N: 51340 **CUSTOMER:**

MODULE : 08/FM0111 **PROFORMA No :** TS/0209/14/EL

DATE: 18 NOV 2019

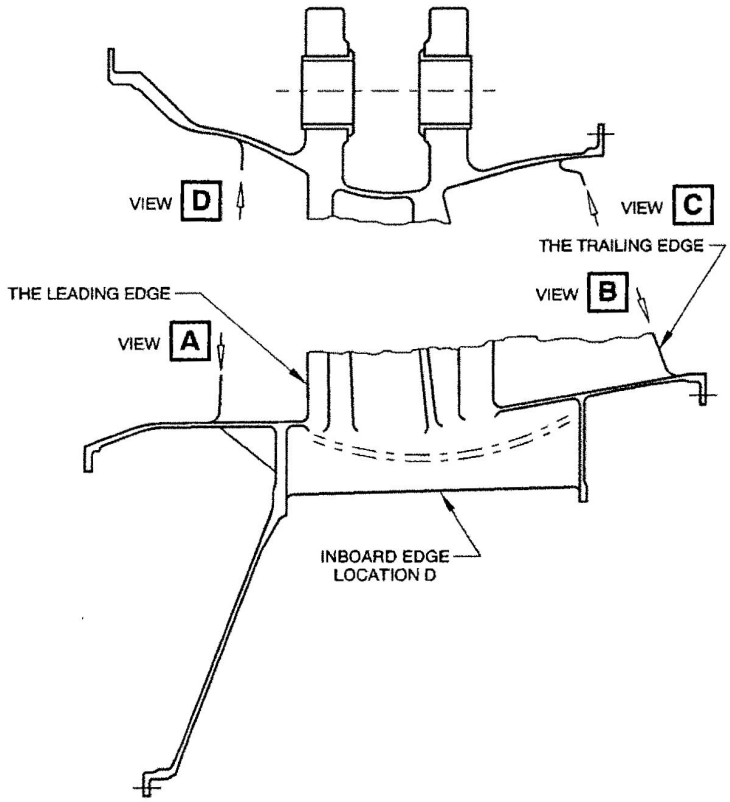

SECTION THROUGH THE LP TURBINE
BEARING SUPPORT ASSEMBLY

def0009240a

Figure A-2: Section through LPT Exhaust Case Assembly

FORM02050

SPECIAL INSPECTION REQUIREMENT

ENGINE S/N: 51340 **CUSTOMER:**

MODULE : 08/F170111 **PROFORMA No :** TS/0209/14/EL

DATE: 18 NOV 2019

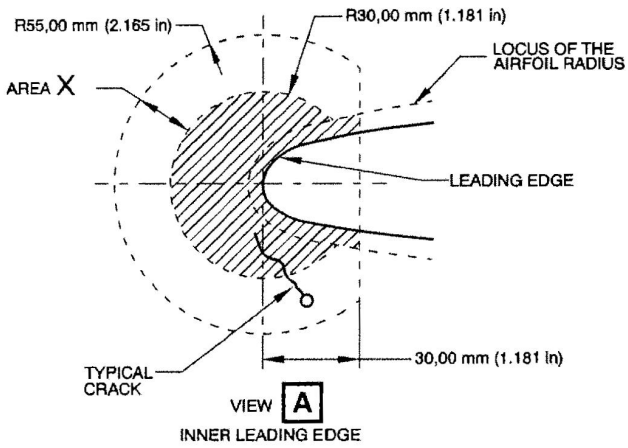

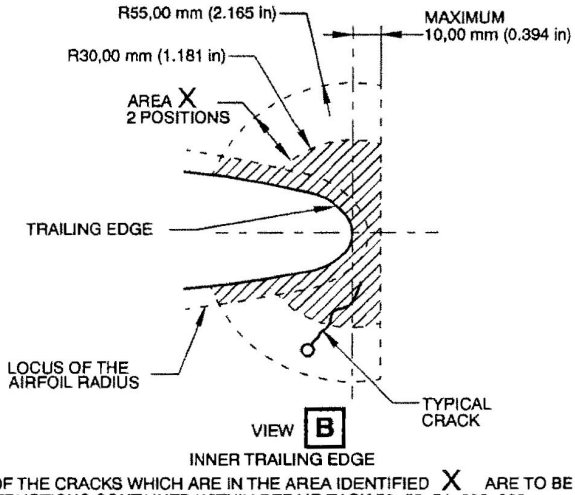

THE ENDS OF THE CRACKS WHICH ARE IN THE AREA IDENTIFIED X ARE TO BE STOP DRILLED TO THE INSTRUCTIONS CONTAINED WITHIN REPAIR TASK 72-52-51-300-002
STOP DRILLING IS ONLY PERMITTED THROUGH WALL SECTIONS WHICH ARE OF A CONSTANT THICKNESS
CRACKS ARE PERMITTED IN THE AREA IDENTIFIED
STOP DRILLING IS NOT PERMITTED IN THE AREAS IDENTIFIED AND INTO THE LUGS, FLANGES AND THE BOSSES ON THE OUTER SURFACE OF THE CASING

def0009238

Figure A-3: Inner annulus details and dimensions

SPECIAL INSPECTION REQUIREMENT

ENGINE S/N: 51340 **CUSTOMER**

MODULE : 08FM0111 **PROFORMA No :** TS/0209/14/EL

DATE: 18 NOV 2019

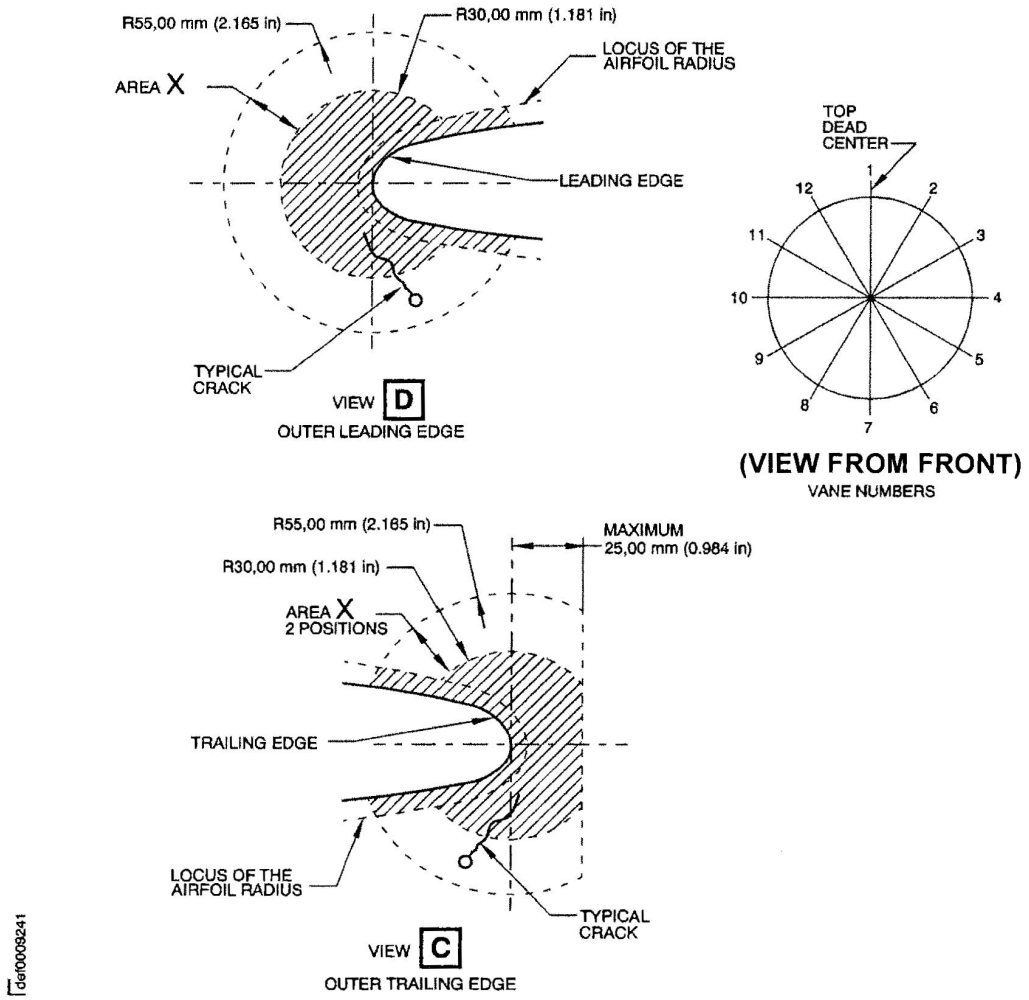

Figure A-4: Outer annulus details and dimensions

FORM02050

SPECIAL INSPECTION REQUIREMENT

ENGINE S/N: 51340

CUSTOMER

MODULE : 08/FM0111

PROFORMA No : TS/0209/14/EL

DATE: 18 NOV 2019

Table 1: Inspection finding of the Exhaust Case at Struts / Vanes

Strut No.	Inner		Outer		Stop drill hole present (Y/N)	Within EM limit (Y/N)
	L/E	T/E	L/E	T/E		
1	NIL	NIL	NIL	NIL	N	Y
2	NIL	NIL	NIL	NIL	N	Y
3	NIL	NIL	NIL	NIL	N	Y
4	0.360"	NIL	NIL	NIL	N	Y
5	0.332"	NIL	NIL	NIL	N	Y
6	0.423"	NIL	NIL	NIL	N	Y
7	0.761"	NIL	NIL	NIL	N	Y
8	NIL	NIL	NIL	NIL	N	Y
9	NIL	NIL	NIL	NIL	N	Y
10	NIL	NIL	NIL	NIL	N	Y
11	0.625"	NIL	NIL	NIL	N	Y
12	NIL	NIL	NIL	NIL	N	Y

FORM02050

HONG KONG AERO ENGINE SERVICES LIMITED

ENGINE LIFE CONTROL ITEMS OFF-ON STATUS RECORD

Technical Records

Customer	:	Engine Serial Number	: 51340	Engine Type	: RB211-TRENT-884-17
Sales Order	: 1390047	Time / Cycle Since New	: 62099.00 / 12482.00	Print Date	: 19-Nov-2019 18:35:34

Off Status					On Status							
ATA Ref.	Description	Part No.	Serial No.	TSN/FCSN (Hr./Cyc.)	Part No.	Serial No.	TSN/FCSN (Hr./Cyc.)	Time/Cycle = (Hr./Cyc.)	TSDCSN (Cycle)	Life Limit /Remains	SDC Limit /Remains	Remarks
72-00-00	ENGINE	TRENT884-17		62099.00 / 12482.00	TRENT884-17		62099.00 / 12482.00	TSR/CSR = 0.00/0.00	N/A	N/A / N/A	N/A / N/A	Work Done:Refurbished
72-00-31	MODULE 31	M01901AA		62099.00 / 12482.00	M01901AA		62099.00 / 12482.00	TSO/CSO = 25968.00/4839.00	N/A	N/A / N/A	N/A / N/A	S/L:432397414
72-00-32	MODULE 32	M02901AB		62099.00 / 12482.00	M02901AB		62099.00 / 12482.00	TSO/CSO = 25968.00/4839.00	N/A	N/A / N/A	N/A / N/A	S/L:432256022
72-00-33	MODULE 33	M03100083		58914.00 / 11811.00	M03100083		58914.00 / 11811.00	TSO/CSO = 25968.00/4839.00	N/A	N/A / N/A	N/A / N/A	S/L:432355765
72-33-44-01-003	GEARBOX	FK17981		56567.00 / 12817.00	FK40148		0.00 / 0.00	TSO/CSO = 0.00/0.00	N/A	N/A / N/A	N/A / N/A	B/N:0006644049
72-00-34	MODULE 34	M07905AB		62099.00 / 12482.00	M07905AB		62099.00 / 12482.00	TSO/CSO = 62099.00/12482.00	N/A	N/A / N/A	N/A / N/A	S/L:432370247
72-00-41	MODULE 41	M04100092		62099.00 / 12482.00	M04100092		62099.00 / 12482.00	TSR/CSR = 0.00/0.00	N/A	N/A / N/A	N/A / N/A	S/L:432359376
72-00-51	MODULE 51	M05908AA		62099.00 / 12482.00	M05908AA		62099.00 / 12482.00	TSR/CSR = 0.00/0.00	N/A	N/A / N/A	N/A / N/A	S/L:432365646
72-00-52	MODULE 52	M08908AB		60452.00 / 11707.00	M08908AB		60452.00 / 11707.00	TSO/CSO = 25968.00/4839.00	N/A	N/A / N/A	N/A / N/A	S/L:432404688
72-00-61	MODULE 61	M06904AA		62099.00 / 12482.00	M06904AA		62099.00 / 12482.00	TSO/CSO = 25968.00/4839.00	N/A	N/A / N/A	N/A / N/A	S/L:432395007
72-31-16-01-210	DISC-ASSY ROTOR-LP COMP	FK30901		62099.00 / 12482.00	FK30901		0.00 / 0.00	TSO/CSO = 0.00/0.00	0.000	N/A / N/A	13650.000 / 13650.000	B/N:0006624301
72-31-20-01-170	SHAFT-ASSY LP COMP	FK20839		62099.00 / 12482.00	FK20839		0.00 / 0.00	TSO/CSO = 0.00/0.00	0.000	N/A / N/A	15000.000 / 15000.000	B/N:0006613603
72-31-20-01-100	LPC BALANCED SHAFT ASSY	FK23192		62099.00 / 12482.00	FK23192		0.00 / 0.00	TSO/CSO = 0.00/0.00	N/A	N/A / N/A	N/A / N/A	S/L:432397803
72-31-11-01-280	LPC BLADE #01	FW29479		32510.00 / 6233.00	FW29479		32510.00 / 6233.00	TSR/CSR = 0.00/0.00	N/A	15000.00 / 8767.00	N/A / N/A	S/L:431929025
72-31-11-01-280	LPC BLADE #02	FW29479		32510.00 / 6233.00	FW29479		25968.00 / 4839.00	TSR/CSR = 0.00/0.00	N/A	15000.00 / 10161.00	N/A / N/A	S/L:431929025
72-31-11-01-280	LPC BLADE #03	FW29479		32510.00 / 6233.00	FW29479		32510.00 / 6233.00	TSR/CSR = 0.00/0.00	N/A	15000.00 / 8767.00	N/A / N/A	S/L:431929025
72-31-11-01-280	LPC BLADE #04	FW29479		32510.00 / 6233.00	FW29479		32510.00 / 6233.00	TSR/CSR = 0.00/0.00	N/A	15000.00 / 8767.00	N/A / N/A	S/L:431929025
72-31-11-01-280	LPC BLADE #05	FW29479		32510.00 / 6233.00	FW29479		32510.00 / 6233.00	TSR/CSR = 0.00/0.00	N/A	15000.00 / 8767.00	N/A / N/A	S/L:431929025
72-31-11-01-280	LPC BLADE #06	FW29479		32510.00 / 6233.00	FW29479		32510.00 / 6233.00	TSR/CSR = 0.00/0.00	N/A	15000.00 / 8767.00	N/A / N/A	S/L:431929025

Customer Revision: 0
FORM03310

HONG KONG AERO ENGINE SERVICES LIMITED

ENGINE LIFE CONTROL ITEMS OFF-ON STATUS RECORD

Technical Records

Customer :
Sales Order :

Engine Serial Number : 51340
Time / Cycle Since New : 62099.00 / 12482.00

Engine Type : RB211-TRENT-884-17
Print Date : 19-Nov-2019 18:35:34

Off Status					On Status							
ATA Ref.	Description	Part No.	Serial No.	TSN/FCSN (Hr./Cyc.)	Part No.	Serial No.	TSN/FCSN (Hr./Cyc.)	Time/Cycle = (Hr./Cyc.)	TSDCSN (Cycle)	Life Limit /Remains	SDC Limit /Remains	Remarks
72-31-11-01-280	LPC BLADE #07	FW29479		32510.00 / 6233.00	FW29479		32510.00 / 6233.00	TSR/CSR = 0.00/0.00	N/A	15000.00 / 8767.00	N/A / N/A	S/L:431929025
72-31-11-01-280	LPC BLADE #08	FW29479	RGG29430	32510.00 / 6233.00	FW29479		32510.00 / 6233.00	TSR/CSR = 0.00/0.00	N/A	15000.00 / 8767.00	N/A / N/A	S/L:431929025
72-31-11-01-280	LPC BLADE #09	FW29479	RGG29450	32510.00 / 6233.00	FW29479		32510.00 / 6233.00	TSR/CSR = 0.00/0.00	N/A	15000.00 / 8767.00	N/A / N/A	S/L:431929025
72-31-11-01-280	LPC BLADE #10	FW29479	RGG29485	32510.00 / 6233.00	FW29479		32510.00 / 6233.00	TSR/CSR = 0.00/0.00	N/A	15000.00 / 8767.00	N/A / N/A	S/L:431929025
72-31-11-01-280	LPC BLADE #11	FW29479	RGG29572	32510.00 / 6233.00	FW29479		32510.00 / 6233.00	TSR/CSR = 0.00/0.00	N/A	15000.00 / 8767.00	N/A / N/A	S/L:431929025
72-31-11-01-280	LPC BLADE #12	FW29479	RGG29400	32510.00 / 6233.00	FW29479		32510.00 / 6233.00	TSR/CSR = 0.00/0.00	N/A	15000.00 / 8767.00	N/A / N/A	S/L:431929025
72-31-11-01-280	LPC BLADE #13	FW29479	RGG29236	32510.00 / 6233.00	FW29479		32510.00 / 6233.00	TSR/CSR = 0.00/0.00	N/A	15000.00 / 8767.00	N/A / N/A	S/L:431929025
72-31-11-01-280	LPC BLADE #14	FW29479	RGG29356	32510.00 / 6233.00	FW29479		32510.00 / 6233.00	TSR/CSR = 0.00/0.00	N/A	15000.00 / 8767.00	N/A / N/A	S/L:431929025
72-31-11-01-280	LPC BLADE #15	FW29479	RGG28803	32510.00 / 6233.00	FW29479		32510.00 / 6233.00	TSR/CSR = 0.00/0.00	N/A	15000.00 / 8767.00	N/A / N/A	S/L:431929025
72-31-11-01-280	LPC BLADE #16	FW29479	RGG29415	25968.00 / 4839.00	FW29479		32510.00 / 6233.00	TSR/CSR = 0.00/0.00	N/A	15000.00 / 8767.00	N/A / N/A	S/L:431929025
72-31-11-01-280	LPC BLADE #17	FW29479	RGG29419	32510.00 / 6233.00	FW29479		32510.00 / 6233.00	TSR/CSR = 0.00/0.00	N/A	15000.00 / 8767.00	N/A / N/A	S/L:431929025
72-31-11-01-280	LPC BLADE #18	FW29479	RGG29103	25968.00 / 4839.00	FW29479		32510.00 / 6233.00	TSR/CSR = 0.00/0.00	N/A	15000.00 / 8767.00	N/A / N/A	S/L:431929025
72-31-11-01-280	LPC BLADE #19	FW29479	RGG29582	32510.00 / 6233.00	FW29479		32510.00 / 6233.00	TSR/CSR = 0.00/0.00	N/A	15000.00 / 8767.00	N/A / N/A	S/L:431929025
72-31-11-01-280	LPC BLADE #20	FW29479	RGG29294	32510.00 / 6233.00	FW29479		32510.00 / 6233.00	TSR/CSR = 0.00/0.00	N/A	15000.00 / 8767.00	N/A / N/A	S/L:431929025
72-31-11-01-280	LPC BLADE #21	FW29479	RGG29544	32510.00 / 6233.00	FW29479		32510.00 / 6233.00	TSR/CSR = 0.00/0.00	N/A	15000.00 / 8767.00	N/A / N/A	S/L:431929025
72-31-11-01-280	LPC BLADE #22	FW29479	RGG29565	32510.00 / 6233.00	FW29479		32510.00 / 6233.00	TSR/CSR = 0.00/0.00	N/A	15000.00 / 8767.00	N/A / N/A	S/L:431929025
72-31-11-01-280	LPC BLADE #23	FW29479	RGG29422	32510.00 / 6233.00	FW29479		32510.00 / 6233.00	TSR/CSR = 0.00/0.00	N/A	15000.00 / 8767.00	N/A / N/A	S/L:431929025
72-31-11-01-280	LPC BLADE #24	FW29479	RGG28460	32510.00 / 6233.00	FW29479		32510.00 / 6233.00	TSR/CSR = 0.00/0.00	N/A	15000.00 / 8767.00	N/A / N/A	S/L:431929025
72-31-11-01-280	LPC BLADE #25	FW29479	RGG29433	32510.00 / 6233.00	FW29479		32510.00 / 6233.00	TSR/CSR = 0.00/0.00	N/A	15000.00 / 8767.00	N/A / N/A	S/L:431929025

Customer Revision: 0
FORM03310

HONG KONG AERO ENGINE SERVICES LIMITED

ENGINE LIFE CONTROL ITEMS OFF-ON STATUS RECORD

Technical Records

Customer :
Sales Order :

Engine Serial Number : 51340
Time / Cycle Since New : 62099.00 / 12482.00

Engine Type : RB211-TRENT-884-17
Print Date : 19-Nov-2019 18:35:34

Off Status					On Status							
ATA Ref.	Description	Part No.	Serial No.	TSN/FCSN (Hr./Cyc.)	Part No.	Serial No.	TSN/FCSN (Hr./Cyc.)	Time/Cycle = (Hr./Cyc.)	TSDCSN (Cycle)	Life Limit /Remains	SDC Limit /Remains	Remarks
72-31-11-01-280	LPC BLADE #26	FW29479		32510.00 / 6233.00	FW29479		25968.00 / 4839.00	TSR/CSR = 0.00/0.00	N/A	15000.00 / 10161.00	N/A / N/A	S/L:431929025
72-31-11-01-350	LPC ANNULUS FILLER #01	FW32707		11765.00 / 2924.00	FW32707		32095.00 / 6331.00	TSR/CSR = 0.00/0.00	N/A	6700.00 / 369.00	N/A / N/A	S/L:432144130
72-31-11-01-350	LPC ANNULUS FILLER #02	FW32707		11765.00 / 2924.00	FW32707		11765.00 / 2924.00	TSR/CSR = 0.00/0.00	N/A	6700.00 / 3776.00	N/A / N/A	S/L:432082452
72-31-11-01-350	LPC ANNULUS FILLER #03	FW32707		11765.00 / 2924.00	FW32707		11765.00 / 2924.00	TSR/CSR = 0.00/0.00	N/A	6700.00 / 3776.00	N/A / N/A	S/L:432082452
72-31-11-01-350	LPC ANNULUS FILLER #04	FW32707		11765.00 / 2924.00	FW32707		25779.00 / 5743.00	TSR/CSR = 0.00/0.00	N/A	6700.00 / 957.00	N/A / N/A	S/L:432144133
72-31-11-01-350	LPC ANNULUS FILLER #05	FW32707		11765.00 / 2924.00	FW32707		11765.00 / 2924.00	TSR/CSR = 0.00/0.00	N/A	6700.00 / 3776.00	N/A / N/A	S/L:432082452
72-31-11-01-350	LPC ANNULUS FILLER #06	FW32707		32095.00 / 6331.00	FW32707		1003.00 / 227.00	TSR/CSR = 0.00/0.00	N/A	6700.00 / 6473.00	N/A / N/A	S/L:432073719
72-31-11-01-350	LPC ANNULUS FILLER #07	FW32707		25968.00 / 4839.00	FW32707		11765.00 / 2924.00	TSR/CSR = 0.00/0.00	N/A	6700.00 / 3776.00	N/A / N/A	S/L:432082452
72-31-11-01-350	LPC ANNULUS FILLER #08	FW32707		32095.00 / 6331.00	FW32707		32095.00 / 6331.00	TSR/CSR = 0.00/0.00	N/A	6700.00 / 369.00	N/A / N/A	S/L:432144130
72-31-11-01-350	LPC ANNULUS FILLER #09	FW32707		2069.00 / 476.00	FW32707		32095.00 / 6331.00	TSR/CSR = 0.00/0.00	N/A	6700.00 / 369.00	N/A / N/A	S/L:432144130
72-31-11-01-350	LPC ANNULUS FILLER #10	FW32707		2069.00 / 476.00	FW32707		32095.00 / 6331.00	TSR/CSR = 0.00/0.00	N/A	6700.00 / 369.00	N/A / N/A	S/L:432144130
72-31-11-01-350	LPC ANNULUS FILLER #11	FW32707		32095.00 / 6331.00	FW32707		32095.00 / 6331.00	TSR/CSR = 0.00/0.00	N/A	6700.00 / 369.00	N/A / N/A	S/L:432144130
72-31-11-01-350	LPC ANNULUS FILLER #12	FW32707		1003.00 / 227.00	FW32707		32095.00 / 6331.00	TSR/CSR = 0.00/0.00	N/A	6700.00 / 369.00	N/A / N/A	S/L:432144130
72-31-11-01-350	LPC ANNULUS FILLER #13	FW32707		25968.00 / 4839.00	FW32707		1003.00 / 227.00	TSR/CSR = 0.00/0.00	N/A	6700.00 / 6473.00	N/A / N/A	S/L:432073719
72-31-11-01-350	LPC ANNULUS FILLER #14	FW32707		11765.00 / 2924.00	FW32707		11765.00 / 2924.00	TSR/CSR = 0.00/0.00	N/A	6700.00 / 3776.00	N/A / N/A	S/L:432082452
72-31-11-01-350	LPC ANNULUS FILLER #15	FW32707		15188.00 / 3997.00	FW32707		11765.00 / 2924.00	TSR/CSR = 0.00/0.00	N/A	6700.00 / 3776.00	N/A / N/A	S/L:432082452
72-31-11-01-350	LPC ANNULUS FILLER #16	FW32707		15188.00 / 3997.00	FW32707		11765.00 / 2924.00	TSR/CSR = 0.00/0.00	N/A	6700.00 / 3776.00	N/A / N/A	S/L:432082452
72-31-11-01-350	LPC ANNULUS FILLER #17	FW32707		32095.00 / 6331.00	FW32707		25968.00 / 4839.00	TSR/CSR = 0.00/0.00	N/A	6700.00 / 1861.00	N/A / N/A	S/L:432144130
72-31-11-01-350	LPC ANNULUS FILLER #18	FW32707		25968.00 / 4839.00	FW32707		15188.00 / 3997.00	TSR/CSR = 0.00/0.00	N/A	6700.00 / 2703.00	N/A / N/A	S/L:432144133

Customer Revision: 0
FORM03310

HONG KONG AERO ENGINE SERVICES LIMITED

ENGINE LIFE CONTROL ITEMS OFF-ON STATUS RECORD

Technical Records

Customer :
Sales Order :

Engine Serial Number : 51340
Time / Cycle Since New : 62099.00 / 12482.00

Engine Type : RB211-TRENT-884-17
Print Date : 19-Nov-2019 18:35:34

Off Status					On Status							
ATA Ref.	Description	Part No.	Serial No.	TSN/FCSN (Hr./Cyc.)	Part No.	Serial No.	TSN/FCSN (Hr./Cyc.)	Time/Cycle = (Hr./Cyc.)	TSDCSN (Cycle)	Life Limit /Remains	SDC Limit /Remains	Remarks
72-31-11-01-350	LPC ANNULUS FILLER #19	FW32707		32095.00 / 6331.00	FW32707		25968.00 / 4839.00	TSR/CSR = 0.00/0.00	N/A	6700.00 / 1861.00	N/A / N/A	S/L:432144130
72-31-11-01-350	LPC ANNULUS FILLER #20	FW32707		1003.00 / 227.00	FW32707		32095.00 / 6331.00	TSR/CSR = 0.00/0.00	N/A	6700.00 / 369.00	N/A / N/A	S/L:432144130
72-31-11-01-350	LPC ANNULUS FILLER #21	FW32707		11765.00 / 2924.00	FW32707		32095.00 / 6331.00	TSR/CSR = 0.00/0.00	N/A	6700.00 / 369.00	N/A / N/A	S/L:432144130
72-31-11-01-350	LPC ANNULUS FILLER #22	FW32707		25779.00 / 5743.00	FW32707		15188.00 / 3997.00	TSR/CSR = 0.00/0.00	N/A	6700.00 / 2703.00	N/A / N/A	S/L:432144133
72-31-11-01-350	LPC ANNULUS FILLER #23	FW32707		25968.00 / 4839.00	FW32707		2069.00 / 476.00	TSR/CSR = 0.00/0.00	N/A	6700.00 / 6224.00	N/A / N/A	S/L:432073719
72-31-11-01-350	LPC ANNULUS FILLER #24	FW32707		32095.00 / 6331.00	FW32707		2069.00 / 476.00	TSR/CSR = 0.00/0.00	N/A	6700.00 / 6224.00	N/A / N/A	S/L:432073719
72-31-11-01-350	LPC ANNULUS FILLER #25	FW32707		32095.00 / 6331.00	FW32707		25968.00 / 4839.00	TSR/CSR = 0.00/0.00	N/A	6700.00 / 1861.00	N/A / N/A	S/L:432144130
72-31-11-01-350	LPC ANNULUS FILLER #26	FW32707		32095.00 / 6331.00	FW32707		25968.00 / 4839.00	TSR/CSR = 0.00/0.00	N/A	6700.00 / 1861.00	N/A / N/A	S/L:432144130
72-32-31-01-080	IPC STG 1-8 ROTOR SHAFT	FK24100		25968.00 / 4839.00	FK24100		25968.00 / 4839.00	TSO/CSO = 25968.00/4839.00	4203.000	N/A / N/A	12500.000 / 8297.000	S/L:432095422
72-33-21-01-260	IPC REAR SHAFT ASSY	FW18545		45591.00 / 10176.00	FW18545		0.00 / 0.00	TSO/CSO = 0.00/0.00	0.000	N/A / N/A	15000.000 / 15000.000	B/N:0006650108
72-41-31-01-170	HPC STG 1-4 DISC SHAFT ASSY	FK32580		25968.00 / 4839.00	FK32580		0.00 / 0.00	TSO/CSO = 0.00/0.00	0.000	N/A / N/A	5580.000 / 5580.000	B/N:0006607946
72-41-31-01-370	HPC STG 5-6 DISC & CONE	FK27899		25968.00 / 4839.00	FK27899		0.00 / 0.00	TSO/CSO = 0.00/0.00	0.000	N/A / N/A	5000.000 / 5000.000	B/N:0006613519
72-41-51-01-350	HPT ROTOR DISC	FK26893		25968.00 / 4839.00	FK26893		0.00 / 0.00	TSO/CSO = 0.00/0.00	0.000	N/A / N/A	7000.000 / 7000.000	B/N:0006613477
72-41-13-02-250	LINER - COMBUSTION FRONT	FW78286		62099.00 / 12482.00	KH12467		65081.38 / 8303.00	TSO/CSO = 0.00/0.00	N/A	N/A / N/A	N/A / N/A	ex.51375,04FM9947, S/L:432155479, PMO:27365003
72-51-31-01-150	IPT ROTOR DISC	FK33049		59821.00 / 12694.00	FK33049		0.00 / 0.00	TSO/CSO = 0.00/0.00	0.000	N/A / N/A	11610.000 / 11610.000	B/N:0006613579
72-51-33-01-185	IPT ROTOR SHAFT	FW18550		44523.00 / 8273.00	FW18550		44523.00 / 8273.00	TSR/CSR = 0.00/0.00	8273.000	N/A / N/A	15000.000 / 6727.000	S/L:432208546
72-52-31-01-300	LPT STG 1 ROTOR DISC	FK24971		60452.00 / 11707.00	FK24971		0.00 / 0.00	TSO/CSO = 0.00/0.00	0.000	N/A / N/A	15000.000 / 15000.000	B/N:0006617916
72-52-31-01-350	LPT STG 2 ROTOR DISC	FK26625		60452.00 / 11707.00	FK26625		0.00 / 0.00	TSO/CSO = 0.00/0.00	0.000	N/A / N/A	15000.000 / 15000.000	B/N:0006617919
72-52-31-01-470	LPT STG 3 ROTOR DISC	FK26626		60452.00 / 11707.00	FK26626		0.00 / 0.00	TSO/CSO = 0.00/0.00	0.000	N/A / N/A	15000.000 / 15000.000	B/N:0006617917

Customer Revision: 0
FORM03310

HONG KONG AERO ENGINE SERVICES LIMITED

ENGINE LIFE CONTROL ITEMS OFF-ON STATUS RECORD

Technical Records

Customer	:	Engine Serial Number	: 51340	Engine Type	: RB211-TRENT-884-17
Sales Order	:	Time / Cycle Since New	: 62099.00 / 12482.00	Print Date	: 19-Nov-2019 18:35:34

Off Status					On Status							
ATA Ref.	Description	Part No.	Serial No.	TSN/FCSN (Hr./Cyc.)	Part No.	Serial No.	TSN/FCSN (Hr./Cyc.)	Time/Cycle = (Hr./Cyc.)	TSDCSN (Cycle)	Life Limit /Remains	SDC Limit /Remains	Remarks
72-52-31-01-650	LPT STG 4 ROTOR DISC	FK23210	CREW3607	60452.00 / 11707.00	FK23210	CREW15025	0.00 / 0.00	TSO/CSO = 0.00/0.00	0.000	N/A / N/A	15000.000 / 15000.000	B/N:0006617945
72-52-31-01-800	LPT STG 5 ROTOR DISC	FK24200	CREW3591	60452.00 / 11707.00	FK24200	CREW16483	0.00 / 0.00	TSO/CSO = 0.00/0.00	0.000	N/A / N/A	15000.000 / 15000.000	B/N:0006617915
72-52-33-01-200	LPT SHAFT ASSY.	FK26159	BBAP793	60452.00 / 11707.00	FK26159	DJBAP0348	0.00 / 0.00	TSO/CSO = 0.00/0.00	0.000	N/A / N/A	15000.000 / 15000.000	B/N:0006616107

Note:
1. All Parts and Serial Number listed on the above OFF-ON LOG are true and that they are fitted to this module at this shop visit. The Hours and Cycles quoted are supplied by customer.
2. Source of parts/components fitted, please refer to HAESL Long Workscope Tast List for traceability.
3. Total Standard Duty Cycle Since New (TSDCSN); Standard Duty Cycle (SDC)
4. "UNK : Unknown"; "NR : Not Recorded By Customer"; "N/A : Not Applicable"; "NIL : Nil"; "- : Blanked Intentionally";
5. "TSN : Time Since New"; "TSO : Time Since Overhaul"; "TSR : Time Since Refurbish"; "TSSV : Time Since Shop Visit";
6. "CSN : Cycles Since New"; "CSO : Cycles Since Overhaul"; "CSR : Cycles Since Refurbish"; "CSSV : Cycles Since Shop Visit";

Signature : _____ _____

Staff No. : 4600206

Stamp No. : _____ _____

Date and Time : 19 Nov 2019 14:28:00

Customer Revision: 0
FORM03310

HONG KONG AERO ENGINE SERVICES LIMITED

ENGINE MAJOR COMPONENTS OFF-ON STATUS RECORD

Technical Records

Customer	:	Engine Serial Number	:	51340	Engine Type	:	RB211-TRENT-884-17
Sales Order	:	Time / Cycle Since New	:	62099.00 / 12482.00	Print Date	:	19-Nov-2019 18:35:56

Off Status					On Status						
ATA Ref.	Description	Part No.	Serial No.	TSN/CSN (Hr./Cyc.)	Part No.	Serial No.	TSN/CSN (Hr./Cyc.)	TSO/CSO (Hr./Cyc.)	TSSV/CSSV (Hr./Cyc.)	Work Done	Remarks
71-00-02/ 2-1-10	FORWARD MOUNT ASSEMBLY	SHORT REC'D	REC'D	- / -	SHORT REC'D		- / -	- / -	- / -	N/A	Short Released
71-00-02/ 04-01-005	LINK - ASSY THRUST LH	SHORT REC'D	SHORT REC'D	- / -	SHORT REC'D		- / -	- / -	- / -	N/A	Short Released
71-00-02/ 04-01-010	LINK - ASSY THRUST RH	SHORT REC'D	SHORT REC'D	- / -	SHORT REC'D		- / -	- / -	- / -	N/A	Short Released
71-00-02/ 3-1-10	AFT. MOUNT ASSEMBLY	SHORT REC'D	SHORT REC'D	- / -	SHORT REC'D		- / -	- / -	- / -	N/A	Short Released
71-00-02/ 8-1-25	IDG OIL COOLER	SHORT REC'D	SHORT REC'D	- / -	SHORT REC'D		- / -	- / -	- / -	N/A	Short Released
71-00-02/ 9-1-5	IDG	SHORT REC'D	SHORT REC'D	- / -	SHORT REC'D		- / -	- / -	- / -	N/A	Short Released
71-00-02/ 9-01-065	ADAPTOR - QAD	SHORT REC'D	SHORT REC'D	- / -	SHORT REC'D		- / -	- / -	- / -	N/A	Short Released
24-25-03-01-100	VSCF COOLER	160516-2	19-3	68307.20 / 14720.00	160516-2		68307.20 / 14720.00	0.00 / 0.00	0.00 / 0.00	OH	S/L:432195029, PMO:27500500
71-00-02/ 10-1-5	VSCF	SHORT REC'D	SHORT REC'D	- / -	SHORT REC'D		- / -	- / -	- / -	N/A	Short Released
71-00-02/ 11-01-70	THERMOCOUPLE (-70) (1)	SHORT REC'D	SHORT REC'D	- / -	SHORT REC'D		- / -	- / -	- / -	N/A	Short Released
71-00-02/ 11-01-70	THERMOCOUPLE (-70) (2)	SHORT REC'D	SHORT REC'D	- / -	SHORT REC'D		- / -	- / -	- / -	N/A	Short Released
71-00-02/ 11-01-380	THERMOCOUPLE (-380) (1)	SHORT REC'D	SHORT REC'D	- / -	SHORT REC'D		- / -	- / -	- / -	N/A	Short Released
71-00-02/ 11-01-380	THERMOCOUPLE (-380) (2)	SHORT REC'D	SHORT REC'D	- / -	SHORT REC'D		- / -	- / -	- / -	N/A	Short Released
71-00-02/ 13-1/ -2-5	HYDRAULIC PUMP	SHORT REC'D	SHORT REC'D	- / -	SHORT REC'D		- / -	- / -	- / -	N/A	Short Released
71-00-02/ 17-1-40	FAN AIR VALVE	SHORT REC'D	SHORT REC'D	- / -	SHORT REC'D		- / -	- / -	- / -	N/A	Short Released
71-00-02/ 20-1-65 (Preferred) or 20-1-50 (Original)	ECS PRESSURE SENSOR	SHORT REC'D	SHORT REC'D	- / -	SHORT REC'D		- / -	- / -	- / -	N/A	Short Released
71-00-02/ 20-1-300 (Preferred) or 20-1-270 (Original)	CTAI PRESS. SENSOR (1)	SHORT REC'D	SHORT REC'D	- / -	SHORT REC'D		- / -	- / -	- / -	N/A	Short Released

Customer Revision: 0
FORM03305

HONG KONG AERO ENGINE SERVICES LIMITED

ENGINE MAJOR COMPONENTS OFF-ON STATUS RECORD

Technical Records

Engine Serial Number : 51340
Time / Cycle Since New : 62099.00 / 12482.00
Engine Type : RB211-TRENT-884-17
Print Date : 19-Nov-2019 18:35:56

Off Status					On Status						
ATA Ref.	Description	Part No.	Serial No.	TSN/CSN (Hr./Cyc.)	Part No.	Serial No.	TSN/CSN (Hr./Cyc.)	TSO/CSO (Hr./Cyc.)	TSSV/CSSV (Hr./Cyc.)	Work Done	Remarks
71-00-02/ 20-1-300 (Preferred) or 20-1-270 (Original)	CTAI PRESS. SENSOR (2)	SHORT REC'D	SHORT REC'D	- / -	SHORT REC'D	SHORT REC'D	- / -	- / -	- / -	N/A	Short Released
71-00-02/ 20-1-5	PRSOV CONTROLLER	SHORT REC'D	SHORT REC'D	- / -	SHORT REC'D		- / -	- / -	- / -	N/A	Short Released
71-00-02/ 20-1-100	HPSOV FAV CONTROLLER	SHORT REC'D	SHORT REC'D	- / -	SHORT REC'D		- / -	- / -	- / -	N/A	Short Released
71-00-02/ 20-1-210	COWL TAI CONTROLLER	SHORT REC'D	SHORT REC'D	- / -	SHORT REC'D		- / -	- / -	- / -	N/A	Short Released
71-00-02/ 20-1-340	CONTROL LINE COOLER	SHORT REC'D	SHORT REC'D	- / -	SHORT REC'D		- / -	- / -	- / -	N/A	Short Released
71-00-02/ 24-1 or 2-110	PRSOV	SHORT REC'D	SHORT REC'D	- / -	SHORT REC'D		- / -	- / -	- / -	N/A	Short Released
71-00-02/ 24-1 or 2-130	DUCT VENT VALVE	SHORT REC'D	SHORT REC'D	- / -	SHORT REC'D		- / -	- / -	- / -	N/A	Short Released
71-00-02/ 24-1-70 or 24-2-70	HPSOV	SHORT REC'D	SHORT REC'D	- / -	SHORT REC'D		- / -	- / -	- / -	N/A	Short Released
71-00-02/ 24-2-30 or 24-1-30	IP CHECK VALVE	SHORT REC'D	SHORT REC'D	- / -	SHORT REC'D		- / -	- / -	- / -	N/A	Short Released
71-00-02/ 25-1-20	C. TAI VALVE	SHORT REC'D	SHORT REC'D	- / -	SHORT REC'D		- / -	- / -	- / -	N/A	Short Released
71-00-02/ 31-1-5	INLET ASSEMBLY	SHORT REC'D	SHORT REC'D	- / -	SHORT REC'D		- / -	- / -	- / -	N/A	Short Released
71-00-02/ 32-1-80	PRIMARY NOZZLE ASSY	SHORT REC'D	SHORT REC'D	- / -	SHORT REC'D		- / -	- / -	- / -	N/A	Short Released
71-00-02/ 32-01-005	EXHAUST PLUG ASSY	SHORT REC'D	SHORT REC'D	- / -	SHORT REC'D		- / -	- / -	- / -	N/A	Short Released
71-00-02/ 32-01-010	PLUG - PRIM FWD	SHORT REC'D	SHORT REC'D	- / -	SHORT REC'D		- / -	- / -	- / -	N/A	Short Released
71-00-02/ 32-01-020	PLUG - PRIM AFT	SHORT REC'D	SHORT REC'D	- / -	SHORT REC'D		- / -	- / -	- / -	N/A	Short Released
71-71-12-11-700	DRAIN TANK EJECTOR	P39-401REVF	1111743	NR / NR	P39-401REVF		NR / NR	0.00 / 0.00	0.00 / 0.00	OH	S/L:432001947, PMO:27353609
72-00-31-01-384	SHFT-ASSY RETENT-LPC	FK14704	IHI116	NR / NR	FK14704		NR / NR	NR / NR	NR / NR	OC	S/L:431819020
72-31-17-01-152	SPINNER ASSY OF REAR LPC	FW12498	RRSU03B305	NR / NR	FW12498		NR / NR	NR / NR	0.00 / 0.00	CR	S/L:432036419, PMO:27380459

Customer Revision: 0
FORM03305

HONG KONG AERO ENGINE SERVICES LIMITED

ENGINE MAJOR COMPONENTS OFF-ON STATUS RECORD

Technical Records

Customer	: HRNCT	Engine Serial Number	: 51340	Engine Type	: RB211-TRENT-884-17
Sales Order	: 1390047	Time / Cycle Since New	: 62099.00 / 12482.00	Print Date	: 19-Nov-2019 18:35:56

Off Status					On Status						
ATA Ref.	Description	Part No.	Serial No.	TSN/CSN (Hr./Cyc.)	Part No.	Serial No.	TSN/CSN (Hr./Cyc.)	TSO/CSO (Hr./Cyc.)	TSSV/CSSV (Hr./Cyc.)	Work Done	Remarks
72-35-11-01-085	LPC SPINNER ASSY	FK25656		NR / NR	FK25656		NR / NR	NR / NR	0.00 / 0.00	CR	S/L:432135592, PMO:27462640
72-35-11-01-220	NOSE CONE FAIRING ASSY	FK24723		NR / NR	FK24723		NR / NR	NR / NR	0.00 / 0.00	CR	S/L:432149948, PMO:27461951
72-55-11-01-400	DISTRIBUTOR - OIL	FK24226		NR / NR	FK24226		NR / NR	NR / NR	NR / NR	OC	S/L:431854982
72-55-15-01-700	LPT SPEED PROBE	993-4-14		NR / NR	993-4-14		NR / NR	NR / NR	0.00 / 0.00	CR	S/L:432093055, PMO:27479261
72-55-15-01-700	LPT SPEED PROBE	S683-4-18		NR / NR	993-4-14		0.00 / 0.00	0.00 / 0.00	0.00 / 0.00	NEW	B/N:0006505697
72-55-15-01-700	LPT SPEED PROBE	S683-4-18		NR / NR	993-4-14		0.00 / 0.00	0.00 / 0.00	0.00 / 0.00	NEW	B/N:0006505697
72-62-11-01-163	SHAFT, ASSY DRIVE-EXT. GEARBOX	FK17896		NR / NR	FK17896		NR / NR	NR / NR	0.00 / 0.00	CR	S/L:432125556,432125553,431944203, PMO:27458661,27458654
73-12-11-01-250	FUEL PUMP	721400-3		34545.57 / 10771.00	721400-3		34545.57 / 10771.00	3937.57 / 934.00	3937.57 / 934.00	OC	S/L:432012559
73-21-11-01-350	ENGINE ELECTRONIC CONTROL	EEC9000-07		63138.87 / 15687.00	SHORT RELEASED		- / -	- / -	- / -	N/A	Short Released
73-21-12-01-260	DATA ENTRY PLUG	DEP6000MK3		NR / NR	DEP6000MK3		NR / NR	NR / NR	NR / NR	N/D	Not Disassembly
73-21-13-01-402	FUEL METERING UNIT	FMU801-01		16373.13 / 3531.00	FMU801-01		16373.13 / 3531.00	NR / NR	NR / NR	OC	S/L:431783677
73-21-14-01-070	DED. GEN. STATOR	2704550-1		60890.52 / 11049.00	2704550-1		60890.52 / 11049.00	0.00 / 0.00	0.00 / 0.00	OH	S/L:432341022, PMO:27353610
73-21-14-01-274	DED. GEN. ROTOR	2704532-1		NR / NR	2704532-1		NR / NR	NR / NR	NR / NR	N/D	Not Disassembly
73-21-15-01-350	POWER CONDITIONING CONTROL	PCU5000MK5		53320.70 / 12973.00	PCU5000MK5		53320.70 / 12973.00	NR / NR	NR / NR	OC	S/L:431777280
73-21-16-01-400	PROBE-P20/T20 SENSING	SHORT REC'D		- / -	SHORT REC'D		- / -	- / -	- / -	N/A	Short Released
73-21-20-01-350	OVERSPEED PROTECTION CONTROL	OPU8050MK2		60761.40 / 16692.00	OPU8050MK2		60761.40 / 16692.00	NR / NR	NR / NR	OC	S/L:431777992
73-31-11-01-090	FUEL FLOW TRANSMITTER	9-217-62		59856.63 / 12146.00	9-217-62		59856.63 / 12146.00	NR / NR	NR / NR	N/D	Not Disassembly
73-34-11-01-050	FUEL FILTER DIFF. PRESS SWITCH	21SN04-338		53513.92 / 13180.00	21SN04-338		53513.92 / 13180.00	NR / NR	NR / NR	N/D	Not Disassembly
74-11-11-01-502	IGNITOR BOX (UPPER)	430154		62099.08 / 12482.00	SHORT RELEASED		- / -	- / -	- / -	N/A	Short Released

Customer Revision: 0
FORM03305

HONG KONG AERO ENGINE SERVICES LIMITED

ENGINE MAJOR COMPONENTS OFF-ON STATUS RECORD

Technical Records

Customer :
Sales Order :

Engine Serial Number : 51340
Time / Cycle Since New : 62099.00 / 12482.00

Engine Type : RB211-TRENT-884-17
Print Date : 19-Nov-2019 18:35:56

Off Status					On Status						
ATA Ref.	Description	Part No.	Serial No.	TSN/CSN (Hr./Cyc.)	Part No.	Serial No.	TSN/CSN (Hr./Cyc.)	TSO/CSO (Hr./Cyc.)	TSSV/CSSV (Hr./Cyc.)	Work Done	Remarks
74-11-11-01-502	IGNITOR BOX (LOWER)	430154		62099.08 / 12482.00	SHORT RELEASED		- / -	- / -	- / -	N/A	Short Released
74-21-11-01-200	LEAD - IGN SYS (UPPER)	430937-3		NR / NR	430937-3		0.00 / 0.00	0.00 / 0.00	0.00 / 0.00	NEW	B/N:0006563245
74-21-11-02-200	LEAD - IGN SYS (LOWER)	430937-3		NR / NR	430937-3		NR / NR	NR / NR	NR / NR	N/D	Not Disassembly
74-21-12-01-200	IGNITOR PLUG (POS#10)	CH34736		NR / NR	CH34736		0.00 / 0.00	0.00 / 0.00	0.00 / 0.00	NEW	B/N:0006552693
74-21-12-01-200	IGNITOR PLUG (POS#16)	CH34736		NR / NR	CH34736		0.00 / 0.00	0.00 / 0.00	0.00 / 0.00	NEW	B/N:0006552693
75-24-11-01-600	T.I.C. SOLENOID VALVE	506-1-04040-002		62099.08 / 12482.00	506-1-04040-002		62099.08 / 12482.00	NR / NR	NR / NR	OC	S/L:431783678
75-24-12-01-230	T.I.C. ACTUATOR	754-1-40480-002		71390.98 / 16139.00	754-1-40480-002		71390.98 / 16139.00	0.00 / 0.00	0.00 / 0.00	OH	S/L:432038428, PMO:27353611
75-24-13-01-580	T.I.C. VALVE	SHORT REC'D		- / -	SHORT REC'D		- / -	- / -	- / -	N/A	Short Released
75-33-11-01-750	VARIABLE STATOR VANE ACTUATOR (1)	1876MK3		62963.65 / 11384.00	1876MK3		62963.65 / 11384.00	0.00 / 0.00	0.00 / 0.00	OH	S/L:431987612, PMO:27353835
75-33-11-01-750	VARIABLE STATOR VANE ACTUATOR (2)	1876MK3		61417.90 / 12204.00	1876MK3		61417.90 / 12204.00	0.00 / 0.00	0.00 / 0.00	OH	S/L:431987616, PMO:27353837
75-33-12-01-550	VARIABLE STATOR VANE CONTROL	1875MK5		55951.07 / 11714.00	1875MK5		55951.07 / 11714.00	0.00 / 0.00	0.00 / 0.00	OH	S/L:432018784, PMO:27353838
75-33-15-01-890	HP/IP SOLENOID VALVE	EA100377B		7282.78 / 1618.00	EA100377B		7282.78 / 1618.00	7282.78 / 1618.00	3652.54 / 825.00	OC	S/L:432012780
75-33-16-01-100	IP AIR BLEED VALVE (1)	EB100060B		62665.07 / 15592.00	EB100060B		62665.07 / 15592.00	24734.58 / 4657.00	0.00 / 0.00	CR	S/L:431919277, PMO:27353842
75-33-16-01-100	IP AIR BLEED VALVE (2)	EB100060B		70969.15 / 17273.00	EB100060B		70969.15 / 17273.00	24734.58 / 4657.00	0.00 / 0.00	CR	S/L:431919412, PMO:27353843
75-33-16-01-100	IP AIR BLEED VALVE (3)	EB100060B		62665.07 / 15592.00	EB100060B		62665.07 / 15592.00	24734.58 / 4657.00	0.00 / 0.00	CR	S/L:431919416, PMO:27353844
75-33-17-01-100	HP 3 AIR BLEED VALVE (1)	AC69588		57925.98 / 11802.00	AC69588		57925.98 / 11802.00	0.00 / 0.00	0.00 / 0.00	OH	S/L:432194147, PMO:27500355
75-33-17-01-100	HP 3 AIR BLEED VALVE (2)	AC69588		57925.98 / 11802.00	AC69588		57925.98 / 11802.00	0.00 / 0.00	0.00 / 0.00	OH	S/L:432194145, PMO:27500356
75-33-17-01-100	HP 3 AIR BLEED VALVE (3)	AC69588		63850.98 / 12708.00	AC69588		63850.98 / 12708.00	0.00 / 0.00	0.00 / 0.00	OH	S/L:432162549, PMO:27500358
75-33-18-01-100	IP BLEED VALVE SOLENOID	3399132-3		50256.10 / 10338.00	3399132-3		50256.10 / 10338.00	0.00 / 0.00	0.00 / 0.00	OH	S/L:432186963, PMO:27500364

Customer Revision: 0
FORM03305

HONG KONG AERO ENGINE SERVICES LIMITED

ENGINE MAJOR COMPONENTS OFF-ON STATUS RECORD

Technical Records

Customer :
Sales Order :

Engine Serial Number : 51340
Time / Cycle Since New : 62099.00 / 12482.00

Engine Type : RB211-TRENT-884-17
Print Date : 19-Nov-2019 18:35:56

Off Status					On Status						
ATA Ref.	Description	Part No.	Serial No.	TSN/CSN (Hr./Cyc.)	Part No.	Serial No.	TSN/CSN (Hr./Cyc.)	TSO/CSO (Hr./Cyc.)	TSSV/CSSV (Hr./Cyc.)	Work Done	Remarks
77-21-11-01-205	T7 THERMOCOUPLE ASSY	684-17-29		NR / NR	684-17-29	2	NR / NR	NR / NR	0.00 / 0.00	CR	S/L:432218694, PMO:27387004
77-21-11-01-205	T7 THERMOCOUPLE ASSY	684-17-29		NR / NR	684-17-29	2	NR / NR	NR / NR	0.00 / 0.00	CR	S/L:432218694, PMO:27387004
77-21-11-01-205	T7 THERMOCOUPLE ASSY	684-17-29		NR / NR	684-17-29	3	0.00 / 0.00	0.00 / 0.00	0.00 / 0.00	NEW	B/N:0006569606
77-21-11-01-205	T7 THERMOCOUPLE ASSY	684-17-29		NR / NR	684-17-29	3	0.00 / 0.00	0.00 / 0.00	0.00 / 0.00	NEW	B/N:0006569606
77-21-11-01-205	T7 THERMOCOUPLE ASSY	684-17-29		NR / NR	684-17-29	2	NR / NR	NR / NR	0.00 / 0.00	CR	S/L:432218694, PMO:27387004
77-21-11-01-205	T7 THERMOCOUPLE ASSY	684-17-29		NR / NR	684-17-29	3	NR / NR	NR / NR	0.00 / 0.00	CR	S/L:432218694, PMO:27387004
77-21-11-01-205	T7 THERMOCOUPLE ASSY	684-17-29		NR / NR	684-17-29		NR / NR	NR / NR	0.00 / 0.00	CR	S/L:432218694, PMO:27387004
77-21-11-01-205	T7 THERMOCOUPLE ASSY	684-17-29		NR / NR	684-17-29		NR / NR	NR / NR	0.00 / 0.00	CR	S/L:432218694, PMO:27387004
77-21-11-01-205	T7 THERMOCOUPLE ASSY	684-17-29		NR / NR	684-17-29		NR / NR	NR / NR	0.00 / 0.00	CR	S/L:432218694, PMO:27387004
77-21-11-01-205	T7 THERMOCOUPLE ASSY	684-17-29		NR / NR	684-17-29		NR / NR	NR / NR	0.00 / 0.00	CR	S/L:432218694, PMO:27387004
77-21-11-01-205	T7 THERMOCOUPLE ASSY	684-17-29		NR / NR	684-17-29	1	NR / NR	NR / NR	0.00 / 0.00	CR	S/L:432218694, PMO:27387004
77-21-11-01-205	T7 THERMOCOUPLE ASSY	684-17-29		NR / NR	684-17-29	1	NR / NR	NR / NR	0.00 / 0.00	CR	S/L:432218694, PMO:27387004
77-21-11-01-205	T7 THERMOCOUPLE ASSY	684-17-29		NR / NR	684-17-29	1	NR / NR	NR / NR	0.00 / 0.00	CR	S/L:432218694, PMO:27387004
77-21-11-01-205	T7 THERMOCOUPLE ASSY	684-17-29		NR / NR	684-17-29	1	NR / NR	NR / NR	0.00 / 0.00	CR	S/L:432218694, PMO:27387004
77-21-11-01-205	T7 THERMOCOUPLE ASSY	684-17-29		NR / NR	684-17-29	1	NR / NR	NR / NR	0.00 / 0.00	CR	S/L:432218694, PMO:27387004
77-21-11-01-205	T7 THERMOCOUPLE ASSY	684-17-29		NR / NR	684-17-29	1	NR / NR	NR / NR	0.00 / 0.00	CR	S/L:432218694, PMO:27387004
77-21-12-01-218	T7 THERMOCOUPLE LEAD-POSITIVE	02001TH002		NR / NR	02001TH002	1	0.00 / 0.00	0.00 / 0.00	0.00 / 0.00	NEW	B/N:0006542844
77-21-12-01-220	T7 THERMOCOUPLE LEAD-NEGATIVE	02002TH002		NR / NR	02002TH002	3	0.00 / 0.00	0.00 / 0.00	0.00 / 0.00	NEW	B/N:0006542859

Customer Revision: 0
FORM03305

HONG KONG AERO ENGINE SERVICES LIMITED

ENGINE MAJOR COMPONENTS OFF-ON STATUS RECORD

Technical Records

Customer :
Sales Order :

Engine Serial Number : 51340
Time / Cycle Since New : 62099.00 / 12482.00

Engine Type : RB211-TRENT-884-17
Print Date : 19-Nov-2019 18:35:56

Off Status					On Status						
ATA Ref.	Description	Part No.	Serial No.	TSN/CSN (Hr./Cyc.)	Part No.	Serial No.	TSN/CSN (Hr./Cyc.)	TSO/CSO (Hr./Cyc.)	TSSV/CSSV (Hr./Cyc.)	Work Done	Remarks
77-22-11-01-075	OVERHEAT DETECTOR FWD THERMOCOUPLE	2723RTC1		NR / NR	2723RTC1		0.00 / 0.00	0.00 / 0.00	0.00 / 0.00	NEW	B/N:0006542455
77-22-11-01-094	OVERHEAT DETECTOR REAR THERMOCOUPLE	856-5-17		NR / NR	852-6-17		0.00 / 0.00	0.00 / 0.00	0.00 / 0.00	NEW	B/N:0006586039
77-32-11-01-200	VIBRATION TRANSMITTER (FRONT)	144-958-000-011		55461.63 / 11358.00	SHORT RELEASED		- / -	- / -	- / -	N/A	SHORT RELEASED
77-32-11-02-200	VIBRATION TRANSMITTER (REAR)	144-707-000-021		55461.63 / 11358.00	144-707-000-021		55461.63 / 11358.00	NR / NR	NR / NR	OC	S/L:431803879
77-32-13-01-200	3 WAY JUNCTION BOX	822-202-000-031		NR / NR	822-202-000-031		NR / NR	NR / NR	NR / NR	OC	S/L:431804071
77-32-14-01-200	HARNESS, ASSY, VIBRATION BOX TO PYLON	922-241-000-011		NR / NR	922-241-000-011		0.00 / 0.00	0.00 / 0.00	0.00 / 0.00	NEW	B/N:0006655643
77-33-11-01-200	T25 THERMOCOUPLE PROBE	2712RTC1		NR / NR	2712RTC1		0.00 / 0.00	0.00 / 0.00	0.00 / 0.00	NEW	B/N:0006672378
77-33-12-01-200	T30 THERMOCOUPLE PROBE (1)	2716RTC1		NR / NR	2716RTC1		0.00 / 0.00	0.00 / 0.00	0.00 / 0.00	NEW	B/N:0006531822
77-33-12-02-200	T30 THERMOCOUPLE PROBE (2)	2716RTC1		NR / NR	2716RTC1		0.00 / 0.00	0.00 / 0.00	0.00 / 0.00	NEW	B/N:0006531822
77-33-12-03-200	T30 THERMOCOUPLE PROBE (3)	2716RTC1		NR / NR	2716RTC1		0.00 / 0.00	0.00 / 0.00	0.00 / 0.00	NEW	B/N:0006531822
79-11-11-01-200	OIL TANK	FK32522		NR / NR	FK32522		NR / NR	NR / NR	NR / NR	OC	S/L:431783679
79-11-12-02-050	OIL FILLER CAP	436-402-2		NR / NR	436-402-2		NR / NR	NR / NR	0.00 / 0.00	CR	S/L:432403925, PMO:27358330
79-21-11-01-030	FUEL COOLED OIL COOLER	55003001-21		40751.18 / 10927.00	55003001-21		40751.18 / 10927.00	29297.79 / 5643.00	NR / NR	OC	S/L:431783951
79-21-12-01-100	AIR/OIL HEAT EXCHANGER	3200672-5		48103.42 / 10955.00	3200672-5		48103.42 / 10955.00	0.00 / 0.00	0.00 / 0.00	OH	S/L:432239330, PMO:27500372
79-22-11-01-100	OIL PRESS & RETURN PUMP	LR47390D		19516.73 / 3948.00	LR47390D		19516.73 / 3948.00	0.00 / 0.00	0.00 / 0.00	OH	S/L:432281340, PMO:27500497
79-22-21-01-412	PROBE-ELECT MAGNETIC CHIP	1B9102P		NR / NR	1B9102P		NR / NR	NR / NR	0.00 / 0.00	CR	S/L:432054848, PMO:27354895
79-31-11-01-610	OIL QUANTITY TRANSMITTER	8TJ146RBW2		64021.12 / 131997.00	8TJ146RBW2		64021.12 / 131997.00	NR / NR	NR / NR	N/D	Not Disassembly
79-32-11-01-410	OIL TEMP. THERMOCOUPLE (1)	849-2-13		NR / NR	849-2-13		NR / NR	NR / NR	NR / NR	N/D	Not Disassembly
79-32-11-01-410	OIL TEMP. THERMOCOUPLE (2)	849-2-13		NR / NR	849-2-13		NR / NR	NR / NR	NR / NR	N/D	Not Disassembly

Customer Revision: 0
FORM03305

HONG KONG AERO ENGINE SERVICES LIMITED

ENGINE MAJOR COMPONENTS OFF-ON STATUS RECORD

Technical Records

Customer :
Sales Order :

Engine Serial Number : 51340
Time / Cycle Since New : 62099.00 / 12482.00

Engine Type : RB211-TRENT-884-17
Print Date : 19-Nov-2019 18:35:56

Off Status					On Status						
ATA Ref.	Description	Part No.	Serial No.	TSN/CSN (Hr./Cyc.)	Part No.	Serial No.	TSN/CSN (Hr./Cyc.)	TSO/CSO (Hr./Cyc.)	TSSV/CSSV (Hr./Cyc.)	Work Done	Remarks
79-33-11-01-030	OIL PRESS TRANSMITTER(1)	44337-1		56860.27 / 11292.00	44337-1	1	56860.27 / 11292.00	54829.27 / 10987.00	NR / NR	OC	S/L:431783952
79-33-11-01-030	OIL PRESS TRANSMITTER(2)	44337-1		55451.27 / 11068.00	44337-1	5	55451.27 / 11068.00	54834.27 / 10986.00	NR / NR	OC	S/L:431783953
79-35-11-01-501	FEED OIL FILTER DIFF. PRESS SWITCH	21SN04-339C		62099.08 / 12482.00	21SN04-339C		62099.08 / 12482.00	NR / NR	NR / NR	OC	S/L:431783954
79-35-12-01-686	OIL RETURN DIFF. PRESS SWITCH	21SN04-340		62099.08 / 12482.00	21SN04-340		62099.08 / 12482.00	NR / NR	NR / NR	N/D	Not Disassembly
80-12-11-01-005	PNEUMATIC STARTER	SHORT REC'D		- / -	SHORT REC'D		- / -	- / -	- / -	N/A	Short Released
80-12-13-01-010	PNEUMATIC STARTER CONTROL VALVE	SHORT REC'D		- / -	SHORT REC'D		- / -	- / -	- / -	N/A	Short Released
73-13-11-01-056	FUEL SPRAY NOZZLE-LH	6960498E41		NR / NR	6960498E41		NR / NR	0.00 / 0.00	0.00 / 0.00	OH	S/L:432020802, PMO:27365013
73-13-11-01-056	FUEL SPRAY NOZZLE-LH	6960498E41		NR / NR	6960498E41		NR / NR	0.00 / 0.00	0.00 / 0.00	OH	S/L:432020802, PMO:27365013
73-13-11-01-056	FUEL SPRAY NOZZLE-LH	6960498E41		NR / NR	6960498E41		NR / NR	0.00 / 0.00	0.00 / 0.00	OH	S/L:432020802, PMO:27365013
73-13-11-01-056	FUEL SPRAY NOZZLE-LH	6960498E45		NR / NR	6960498E41		NR / NR	0.00 / 0.00	0.00 / 0.00	OH	S/L:432020802, PMO:27365013
73-13-11-01-056	FUEL SPRAY NOZZLE-LH	6960498E45		NR / NR	6960498E41		NR / NR	0.00 / 0.00	0.00 / 0.00	OH	S/L:432020802, PMO:27365013
73-13-11-01-056	FUEL SPRAY NOZZLE-LH	6960498E45		NR / NR	6960498E45		NR / NR	0.00 / 0.00	0.00 / 0.00	OH	S/L:432020807, PMO:27365013
73-13-11-01-056	FUEL SPRAY NOZZLE-LH	6960498E41		NR / NR	6960498E45		NR / NR	0.00 / 0.00	0.00 / 0.00	OH	S/L:432020807, PMO:27365013
73-13-11-01-056	FUEL SPRAY NOZZLE-LH	6960498E41		NR / NR	6960498E45		NR / NR	0.00 / 0.00	0.00 / 0.00	OH	S/L:432020807, PMO:27365013
73-13-11-01-056	FUEL SPRAY NOZZLE-LH	6960498E41		NR / NR	6960498E45		NR / NR	0.00 / 0.00	0.00 / 0.00	OH	S/L:432020807, PMO:27365013
73-13-11-01-056	FUEL SPRAY NOZZLE-LH	6960498E41		NR / NR	6960498E45		NR / NR	0.00 / 0.00	0.00 / 0.00	OH	S/L:432020901, PMO:27365094
73-13-11-01-056	FUEL SPRAY NOZZLE-LH	6960498E41		NR / NR	6960498E45		NR / NR	0.00 / 0.00	0.00 / 0.00	OH	S/L:432020901, PMO:27365094
73-13-11-01-056	FUEL SPRAY NOZZLE-LH	6960498E41		NR / NR	6960498E45		NR / NR	0.00 / 0.00	0.00 / 0.00	OH	S/L:432020901, PMO:27365094
73-13-11-01-086	FUEL SPRAY NOZZLE-RH	6960498E42		NR / NR	6960498E42		NR / NR	0.00 / 0.00	0.00 / 0.00	OH	S/L:432020787, PMO:27365095

Customer Revision: 0
FORM03305

HONG KONG AERO ENGINE SERVICES LIMITED

ENGINE MAJOR COMPONENTS OFF-ON STATUS RECORD

Technical Records

Customer	:	Engine Serial Number	: 51340	Engine Type	: RB211-TRENT-884-17
Sales Order	:	Time / Cycle Since New	: 62099.00 / 12482.00	Print Date	: 19-Nov-2019 18:35:56

Off Status					On Status						
ATA Ref.	Description	Part No.	Serial No.	TSN/CSN (Hr./Cyc.)	Part No.	Serial No.	TSN/CSN (Hr./Cyc.)	TSO/CSO (Hr./Cyc.)	TSSV/CSSV (Hr./Cyc.)	Work Done	Remarks
73-13-11-01-086	FUEL SPRAY NOZZLE-RH	6960498E42		NR / NR	6960498E42		NR / NR	0.00 / 0.00	0.00 / 0.00	OH	S/L:432020787, PMO:27365095
73-13-11-01-086	FUEL SPRAY NOZZLE-RH	6960498E42		NR / NR	6960498E42		NR / NR	0.00 / 0.00	0.00 / 0.00	OH	S/L:432020787, PMO:27365095
73-13-11-01-086	FUEL SPRAY NOZZLE-RH	6960498E42		NR / NR	6960498E42		NR / NR	0.00 / 0.00	0.00 / 0.00	OH	S/L:432020787, PMO:27365095
73-13-11-01-086	FUEL SPRAY NOZZLE-RH	6960498E42		NR / NR	6960498E42		NR / NR	0.00 / 0.00	0.00 / 0.00	OH	S/L:432020787, PMO:27365095
73-13-11-01-086	FUEL SPRAY NOZZLE-RH	6960498E42		NR / NR	6960498E42		NR / NR	0.00 / 0.00	0.00 / 0.00	OH	S/L:432020787, PMO:27365095
73-13-11-01-086	FUEL SPRAY NOZZLE-RH	6960498E42		NR / NR	6960498E42		NR / NR	0.00 / 0.00	0.00 / 0.00	OH	S/L:432020787, PMO:27365095
73-13-11-01-086	FUEL SPRAY NOZZLE-RH	6960498E46		NR / NR	6960498E42		NR / NR	0.00 / 0.00	0.00 / 0.00	OH	S/L:432020787, PMO:27365095
73-13-11-01-086	FUEL SPRAY NOZZLE-RH	6960498E46		NR / NR	6960498E46		NR / NR	0.00 / 0.00	0.00 / 0.00	OH	S/L:432020800, PMO:27365096
73-13-11-01-086	FUEL SPRAY NOZZLE-RH	6960498E42		NR / NR	6960498E46		NR / NR	0.00 / 0.00	0.00 / 0.00	OH	S/L:432020800, PMO:27365096
73-13-11-01-086	FUEL SPRAY NOZZLE-RH	6960498E46		NR / NR	6960498E46		NR / NR	0.00 / 0.00	0.00 / 0.00	OH	S/L:432020800, PMO:27365096
73-13-11-01-086	FUEL SPRAY NOZZLE-RH	6960498E46		NR / NR	6960498E46		NR / NR	0.00 / 0.00	0.00 / 0.00	OH	S/L:432020800, PMO:27365096

Note:
1. All Parts and Serial Number listed on the above OFF-ON LOG are true and that they are fitted to this module at this shop visit. The Hours and Cycles quoted are supplied by customer.
2. Source of parts/components fitted, please refer to HAESL Long Workscope Tast List for traceability.
3. "UNK : Unknown"; "NR : Not Recorded By Customer"; "N/A : Not Applicable"; "NIL : Nil"; "- : Blanked Intentionally";
4. "TSN : Time Since New"; "TSO : Time Since Overhaul"; "TSR : Time Since Refurbish"; "TSSV : Time Since Shop Visit";
5. "CSN : Cycles Since New"; "CSO : Cycles Since Overhaul"; "CSR : Cycles Since Refurbish"; "CSSV : Cycles Since Shop Visit";

Signature : _____

Staff No. : 4600206

Stamp No. : F

Date and Time : 19 Nov 2019 14:28:00

Customer Revision: 0
FORM03305

RB211-TRENT 800 CRITICAL GROUP A PART - LOG CARD
LPC Rotor Disk

Sales Order: 1390047

Module SN: FM0042

Part Description	Engine Illustrated Part Catalogue Number ATA Section	Part No.	Part Serial No.	Module Part No.	Module Serial No.	Period Date Fm	Period Date To	End Period at Shop Visit	Time Since New (hrs)	Flight Cycles Since New FCSN (A)	Flight Cycles in period	Declared Life SDCs (B)	Declared Life HDCs (C)	Declared Life MDCs (D)	Flight Cycles in Period in FP A	Flight Cycles in Period in FP B	Flight Cycles in Period in FP C	Flight Cycles in Period in FP D	Flight Cycles in Period in FP E	Flight Cycles in Period in FP F	Flight Cycles in Period in FP Heavy	Flight Cycles in Period in FP Max	SDCs in period (E)	Calculated Total SDC since New (F)	Equivalent HDCs Since New (G)	Equivalent MDCs Since New (H)	Life Remaining SDCs (I)	Life Remaining HDCs (J)	Life Remaining MDCs (K)
															0.91	0.91	1	1	1	1	N/A	N/A							
LPC Rotor Disk	72-31-16-01-210	FK30901	RRSU03B305	M01901A A	FM0042	N/A	N/A	YES	0.00	0.00	0.00	13650.00	13650.00	10080.00	0.00	0.00	0.00	0.00	0.00	0.00	0.00	0.00	0.00	0.00	0.00	0.00	13650.00	13650.00	10080.00

Signature : _____

Staff No. : 4176083

Stamp No. : _____ _____

Date and Time : 14-Nov-2019 01:25:00

Version : 1

FORM03174R01

RB211-TRENT 800 CRITICAL GROUP A PART - LOG CARD
IPC Rotor Shaft

Sales Order: 1390047

Module SN: FM0043

Part Description	Engine Illustrated Part Catalogue Number ATA Section	Part No.	Part Serial No.	Module Part No.	Module Serial No.	Period Date Fm	Period Date To	End Period at Shop Visit	Time Since New (hrs)	Flight Cycles Since New FCSN (A)	Flight Cycles in period	Declared Life SDCs (B)	Declared Life HDCs (C)	Declared Life MDCs (D)	Flight Cycles in Period in FP A	Flight Cycles in Period in FP B	Flight Cycles in Period in FP C	Flight Cycles in Period in FP D	Flight Cycles in Period in FP E	Flight Cycles in Period in FP F	Flight Cycles in Period in FP Heavy	Flight Cycles in Period in FP Max	SDCs in period (E)	Calculated Total SDC since New (F)	Equivalent HDCs Since New (G)	Equivalent MDCs Since New (H)	Life Remaining SDCs (I)	Life Remaining HDCs (J)	Life Remaining MDCs (K)
															0.833	0.833	0.833	0.833	0.893	1	N/A	N/A							
IPC Rotor Shaft	72-32-31-01-080	FK24100	RRDCDDB 20538	M02901A B	FM0043	N/A	N/A	N/A	0	0.00	0.00	12500.00	11500.00	10500.00	NEW@27/03/2012									0.00	0.00	0.00	12500.00	11500.00	10500.00
IPC Rotor Shaft	72-32-31-01-080	FK24100	RRDCDDB 20538	M02901A B	FM0043	07-Apr-12	14-Feb-15	NO	N/A	1886.00	1886.00	12500.00	11500.00	10500.00	0.00	0.00	0.00	0.00	1886.00	0.00	0.00	0.00	1685.00	1685.00	1551.00	1416.00	10815.00	9949.00	9084.00
IPC Rotor Shaft	72-32-31-01-080	FK24100	RRDCDDB 20538	M02901A B	FM0043	28-Mar-15	30-Apr-15	NO	N/A	1915.00	29.00	12500.00	11500.00	10500.00	0.00	29.00	0.00	0.00	0.00	0.00	0.00	0.00	25.00	1710.00	1574.00	1437.00	10790.00	9926.00	9063.00
IPC Rotor Shaft	72-32-31-01-080	FK24100	RRDCDDB 20538	M02901A B	FM0043	01-May-15	30-Nov-15	NO	N/A	1922.00	7.00	12500.00	11500.00	10500.00	0.00	0.00	0.00	0.00	0.00	7.00	0.00	0.00	7.00	1717.00	1580.00	1443.00	10783.00	9920.00	9057.00
IPC Rotor Shaft	72-32-31-01-080	FK24100	RRDCDDB 20538	M02901A B	FM0043	01-Dec-15	31-Mar-16	NO	N/A	2109.00	187.00	12500.00	11500.00	10500.00	0.00	187.00	0.00	0.00	0.00	0.00	0.00	0.00	156.00	1873.00	1724.00	1574.00	10627.00	9776.00	8926.00
IPC Rotor Shaft	72-32-31-01-080	FK24100	RRDCDDB 20538	M02901A B	FM0043	01-Apr-16	31-Aug-16	NO	N/A	2440.00	331.00	12500.00	11500.00	10500.00	0.00	0.00	0.00	0.00	0.00	331.00	0.00	0.00	331.00	2204.00	2028.00	1852.00	10296.00	9472.00	8648.00
IPC Rotor Shaft	72-32-31-01-080	FK24100	RRDCDDB 20538	M02901A 8	FM0043	01-Sep-16	21-Apr-19	YES	25968	4839.00	2399.00	12500.00	11500.00	10500.00	0.00	0.00	2399.00	0.00	0.00	0.00	0.00	0.00	1999.00	4203.00	3867.00	3531.00	8297.00	7633.00	6969.00
IPC Rotor Shaft	72-32-31-01-080	FK24100	RRDCDDB 20538	M02901A B	FM0043	N/A	N/A	YES	25968	4839.00	0.00	12500.00	11500.00	10500.00	0.00	0.00	0.00	0.00	0.00	0.00	0.00	0.00	0.00	4203.00	3867.00	3531.00	8297.00	7633.00	6969.00

Signature : _____

Staff No. : 4602236

Stamp No. : _____

Date and Time : 26-Oct-2019 12:26:00

Version : 1

FORM03174R01

RB211-TRENT 800 CRITICAL GROUP A PART - LOG CARD

HPC1-4 Drum

Sales Order: 1390047

Module SN: FM0046

Part Description	Engine Illustrated Part Catalogue Number ATA Section	Part No.	Part Serial No.	Module Part No.	Module Serial No.	Period Date Fm	Period Date To	End Period at Shop Visit	Time Since New (hrs)	Flight Cycles Since New FCSN (A)	Flight Cycles in period	Declared Life SDCs (B)	Declared Life HDCs (C)	Declared Life MDCs (D)	Flight Cycles in Period in FP A	Flight Cycles in Period in FP B	Flight Cycles in Period in FP C	Flight Cycles in Period in FP D	Flight Cycles in Period in FP E	Flight Cycles in Period in FP F	Flight Cycles in Period in FP Heavy	Flight Cycles in Period in FP Max	SDCs in period (E)	Calculated Total SDC since New (F)	Equivalent HDCs Since New (G)	Equivalent MDCs Since New (H)	Life Remaining SDCs (I)	Life Remaining HDCs (J)	Life Remaining MDCs (K)
															0.737	0.782	0.784	0.817	0.967	1	N/A	N/A							
HPC1-4 Drum	72-41-31-01-170	FK32580	RRDCDD037908	M04100092	FM0046	N/A	N/A	YES	0	0.00	0.00	5580.00	5280.00	4500.00	0.00	0.00	0.00	0.00	0.00	0.00	0.00	0.00	0.00	0.00	0.00	0.00	5580.00	5280.00	4500.00

Signature : Tsui Kam Ming

Staff No. : 4128555

Stamp No. :

Date and Time : 07-Nov-2019 12:36:00

Version : 0

RB211-TRENT 800 CRITICAL GROUP A PART - LOG CARD
HPC5-6 Drum

Sales Order: _____

Module SN: _____

Part Description	Engine Illustrated Part Catalogue Number ATA Section	Part No.	Part Serial No.	Module Part No.	Module Serial No.	Period Date Fm	Period Date To	End Period at Shop Visit	Time Since New (hrs)	Flight Cycles Since New FCSN (A)	Flight Cycles in period	Declared Life SDCs (B)	Declared Life HDCs (C)	Declared Life MDCs (D)	Flight Cycles in Period in FP A	Flight Cycles in Period in FP B	Flight Cycles in Period in FP C	Flight Cycles in Period in FP D	Flight Cycles in Period in FP E	Flight Cycles in Period in FP F	Flight Cycles in Period in FP Heavy	Flight Cycles in Period in FP Max	SDCs in period (E)	Calculated Total SDC since New (F)	Equivalent HDCs Since New (G)	Equivalent MDCs Since New (H)	Life Remaining SDCs (I)	Life Remaining HDCs (J)	Life Remaining MDCs (K)
															1	1	1	1	1	1	N/A	N/A							
HPC5-6 Drum	72-41-31-01-370	FK27899	RRDCDD037116	M04100092	FM0046	N/A	N/A	YES	0	0.00	0.00	5000.00	5000.00	4500.00	0.00	0.00	0.00	0.00	0.00	0.00	0.00	0.00	0.00	0.00	0.00	0.00	5000.00	5000.00	4500.00

Signature : _____ _____

Staff No. : 4128555

Stamp No. : _____ _____

Date and Time : 07-Nov-2019 12:39:00

Version : 0

RB211-TRENT 800 CRITICAL GROUP A PART - LOG CARD

IPT Rotor Disk

Sales Order: _____

Module SN: _____

Part Description	Engine Illustrated Part Catalogue Number ATA Section	Part No.	Part Serial No.	Module Part No.	Module Serial No.	Period Date Fm	Period Date To	End Period at Shop Visit	Time Since New (hrs)	Flight Cycles Since New FCSN (A)	Flight Cycles in period	Declared Life SDCs (B)	Declared Life HDCs (C)	Declared Life MDCs (D)	Flight Cycles in Period in FP A	Flight Cycles in Period in FP B	Flight Cycles in Period in FP C	Flight Cycles in Period in FP D	Flight Cycles in Period in FP E	Flight Cycles in Period in FP F	Flight Cycles in Period in FP Heavy	Flight Cycles in Period in FP Max	SDCs in period (E)	Calculated Total SDC since New (F)	Equivalent HDCs Since New (G)	Equivalent MDCs Since New (H)	Life Remaining SDCs (I)	Life Remaining HDCs (J)	Life Remaining MDCs (K)
															0.774	0.805	0.867	0.879	0.985	1	N/A	N/A							
IPT Rotor Disc	72-51-31-01-150	FK33049	RRSU02J316	M05908AA	FM0045	N/A	N/A	YES	0	0.00	0.00	11610.00	10400.00	8400.00	0.00	0.00	0.00	0.00	0.00	0.00	0.00	0.00	0.00	0.00	0.00	0.00	11610.00	10400.00	8400.00

Signature : _____

Staff No. : 4126731

Stamp No. : _____

Date and Time : 26-Oct-2019 10:54:00

Version : 0

FORM03174R01

UNSERVICEABLE

EquipmentNo
210536090

Inspection Stamp
S M NO
603284
-1 2019

Item Ref
TRF004201-723116-01-210 .DISC ASSY ROTOR-LP COMPRESSOR

Eng Mark	TRH0892	Part No	FK30901
			DISC.ASSY
Customer Code	HRNCT	Quantity	1
WBS Element	0.001390047-HTR08_01_LV2	Serial No	CTDK7444
Ex-Engine/Module	TR5134000	TSN	62099
		CSN	12482
Workscope Level	TR02		

Quality

Signature Date

Notification 431818475
Remarks :
HOLD-RTN AS IS-REPLACE & ACTION RR TC SO

Dest ZSUS01 Sect MINI01/1

Requested By

User ID	Name	Date / Time
4603284		ep 2019 21:24.24

Printed By

4603284	1 Sep 2019 21:24.44

Customer

Signature Date

UNSERVICEABLE

EquipmentNo
210536093

Inspection Stamp

Item Ref
TRF004201-723120-01-170 ..SHAFT ASSY LP COMPRESSOR

Eng Mark	TRH0892	Part No	FK20839 SHAFT,ASSY
Customer Code	HRNCT	Quantity	1
WBS Element	0.001390047-HTR08_01_LV2	Serial No	PBAN310
Ex-Engine/Module	TR5134000	TSN	62099
Workscope Level	TR02	CSN	12482

Quality

Signature Date

Notification 431818476
Remarks :
HOLD-RTN AS IS-REPLACE & ACTION RR TC SO

Dest ZSUS01 Sect MINI01/2

Requested By		
User ID	Name	Date / Time
4603284		1 Sep 2019 21:26.37
Printed By		
4603284		1 Sep 2019 21:26.42

Customer

Signature Date

UNSERVICEABLE

EquipmentNo
213152461

Inspection Stamp

Item Ref
TRF009203-723321-01-260 .SHAFT ASSY OF IP COMPRESSOR,REAR

Eng Mark TRH0892
Customer Code HRNCT
WBS Element 0.001390047-HTR08_03_LV2
Ex-Engine/Module TR5134000
Workscope Level TR02

Part No FW18545 Quantity 1
SHAFT,ASSY OF
Serial No DAVN1223
TSN 45591 CSN 10176

Quality
Signature Date

Notification 431847418
Remarks :
REJECT,REPLACE AND ACTION IAW RR TC SO.

Dest ZSUS01 Sect IP03

Requested By
User ID Name Date / Time
4122888 5 Sep 2019 09:29.42
Printed By
4122888 5 Sep 2019 09:31.05

Customer
Signature Date

UNSERVICEABLE

EquipmentNo
214918649

Inspection Stamp
H.Y.
609

Item Ref
TRF004604-724131-01-170 .SHAFT A/O,ROTOR DISCS HP COMPRESSOR

Eng Mark	TRH0892	Part No	FK32580
			SHAFT,A/O,ROTOR DISCS
Customer Code	HRNCT	Quantity	1.000
WBS Element	0.001390047-HTR08_04_LV3	Serial No	RRDCDDB18815
Ex-Engine/Module	TR5134000	TSN	25968
		CSN	4839
Workscope Level	TR03		

Quality

Signature Date

Notification 431784963
Remarks :
HOLD, RTN AS-IS
* 28.08.2019 07:16:21 UK H.Y. Tang (4609141) /(### /(*REPLACE AND ACTION IAW RRTC SO AS PER WSI ITEM 23* /(S/N:RRDCDDB18815 /(TSN:25968 CSN:4839 SDC:4213 /(LIFE LIMIT:5580 LIFE REMAIN:1367 /(MIN REBUILD LIFE:5000 /(RESULT:INSUFFICIENT LIFE FOR REBUILD /(### *

Dest ZSUS01 Sect HPCR

Requested By

User ID	Name	Date / Time
4609141		28 Aug 2019 07:16.19

Printed By
4609141 28 Aug 2019 08:38.47

Customer

Signature Date

UNSERVICEABLE

EquipmentNo
214942144

Inspection Stamp

Item Ref
TRF004604-724131-01-370 .SHAFT A/O,ROTOR REAR STAGE 5 & 6 DISCS

Eng Mark TRH0892
Customer Code
WBS Element 0.001390047-HTR08_04_LV3
Ex-Engine/Module TR5134000
Workscope Level TR03

Part No FK27899 Quantity 1.000
SHAFT,A/O,ROTOR REAR
Serial No RRDCDDB20897
TSN 25968 CSN 4839

Quality
Signature Date

Notification 431785030
Remarks :
HOLD, RTN AS-IS
* 28.08.2019 07:19:32 UK H.Y. Tang (4609141) /(### /(*REPLACE AND ACTION IAW RR TC SO AS PER WSI ITEM 24* /(S/N:RRDCDDB20897 /(TSN:25968 CSN:4839 SDC:4839 /(LIFE LIMIT:5000 LIFE REMAIN:161 /(MIN REBUILD LIFE:5000 /(RESULT:INSUFFICIENT LIFE FOR REBUILD /(### *

Dest ZSUS01 Sect HPCR

Requested By
User ID Name Date / Time
4609141 28 Aug 2019 07:19.07
Printed By
4609141 28 Aug 2019 08:38.47

Customer
Signature Date

UNSERVICEABLE

EquipmentNo
214794428

Inspection Stamp

Item Ref
TRF004604-724151-01-350 .DISC ROTOR-HP TURBINE

Eng Mark	TRH0892	Part No	FK26893
Customer Code	HRNCT		DISC,
WBS Element	0.001390047-HTR08_04_LV3	Serial No	LDRCZ20286
Ex-Engine/Module	TR5134000	TSN	25968
Workscope Level	TR03		

Quantity 1.000

CSN 4839

Quality

Signature Date

Notification 431785035
Remarks :
HOLD, RTN AS-IS
* 28.08.2019 07:22:29 UK H.Y. Tang (4609 141) /(### /(*REPLACE AND ACTION IAW RR TC SO AS PER WSI ITEM 25* /(S/N:LDRCZ202 86 /(TSN:25968 CSN:4839 SDC:4839 /(LIFE LIMIT:7000 LIFE REMAIN:2161 /(MIN REBUIL D LIFE:5000 /(RESULT:INSUFFICIENT LIFE F OR REBUILD /(### *

Dest ZSUS01 Sect HPTR

Requested By

User ID	Name	Date / Time
4609141		28 Aug 2019 07:22.17
Printed By		28 Aug 2019 08:39.00
4609141		

Customer

Signature Date

UNSERVICEABLE

EquipmentNo
210542449

Inspection Stamp

Item Ref
TRF004505-725131-01-150 .DISC ROTOR IP TURBINE

Eng Mark	TRH0892	Part No	FK33049 DISC,ROTOR
Customer Code	HRNCT	Quantity	1
WBS Element	0.001390047-HTR08_05_LV3	Serial No	LDREB10406
Ex-Engine/Module	TR5134000	TSN	59821
Workscope Level	TR03	CSN	12694

Quality

Signature Date

Notification 431785821
Remarks :
HOLD, RTN AS-IS
* 28.08.2019 08:28:34 UK H.Y. Tang (4609141) ### *REPLACE AND ACTION IAW RR TC SO AS PER WSI ITEM 21* S/N:LDREB10406 TSN:59821 CSN:12694 SDC:11128 LIFE LIMIT:11610 LIFE REMAIN:482 MIN REBUILD LIFE:5000 RESULT:INSUFFICIENT LIFE FOR REBUILD ###

Dest ZSUS01 Sect IPTR01

Requested By

User ID	Name	Date / Time
4609141		28 Aug 2019 08:28.31

Printed By

4609141	28 Aug 2019 08:28.40

Customer

Signature Date

UNSERVICEABLE

EquipmentNo
209770582

Inspection Stamp
60333
02 SEP 2019

Item Ref
TRF011108-725231-01-300 .DISC ROTOR-LP TURBINE STAGE 1

Eng Mark	TRH0892	Part No	FK24971
Customer Code	HRNCT		DISC,
WBS Element	0.001390047-HTR08_08_LV2	Serial No	CREW3425
Ex-Engine/Module	TR5134000	TSN	60452
Workscope Level	TR02		

Quantity 1

CSN 11707

Quality

Signature Date

Notification 431825583
Remarks :
HOLD-RTN AS IS-ACTION IAW RR TC SO

Dest ZSUS01 Sect LPTR01

Requested By

User ID	Name	Date / Time
4603937		2 Sep 2019 21:51.28
Printed By		
4603937 K		2 Sep 2019 21:57.58

Customer

Signature Date

UNSERVICEABLE

EquipmentNo
209798641

Item Ref
TRF011108-725231-01-350 .DISC ROTOR-LP TURBINE STAGE 2

Inspection Stamp
H P K
603937
02 SEP 2019

Eng Mark	TRH0892	Part No	FK26625
			DISC,
Customer Code	HRNCT	Quantity	1
WBS Element	0.001390047-HTR08_08_LV2	Serial No	CREW3407
Ex-Engine/Module	TR5134000	TSN	60452
		CSN	11707
Workscope Level	TR02		

Quality

Signature Date

Notification 431825585
Remarks :
HOLD-RTN AS IS-ACTION IAW RR TC SO

Dest ZSUS01 Sect LPTR02

Requested By

User ID	Name	Date / Time
4603937		2 Sep 2019 21:59.44

Printed By

4603937	2 Sep 2019 22:00.13

Customer

Signature Date

UNSERVICEABLE

EquipmentNo
209770609

Inspection Stamp

02 SEP 2019

Item Ref
TRF011108-725231-01-470 .DISC ROTOR-LP TURBINE STAGE 3

Eng Mark TRH0892
Customer Code HRNCT
WBS Element 0.001390047-HTR08_08_LV2
Ex-Engine/Module TR5134000
Workscope Level TR02

Part No FK26626 Quantity 1
DISC,
Serial No CREW3350
TSN 60452 CSN 11707

Quality

Signature Date

Notification 431825588
Remarks :
HOLD-RTN AS IS-ACTION IAW RR TC SO

Dest ZSUS01 Sect LPTR03

Requested By
User ID Name Date / Time
4603937 2 Sep 2019 22:01.58
Printed By
4603937 2 Sep 2019 22:02.02

Customer

Signature Date

UNSERVICEABLE

EquipmentNo
209770640

Item Ref
TRF011108-725231-01-650 .DISC ROTOR-LP TURBINE SATGE 4

Inspection Stamp
02 SEP 2019

Eng Mark	TRH0892	Part No	FK23210 DISC,
Customer Code	HRNCT	Quantity	1
WBS Element	0.001390047-HTR08_08_LV2	Serial No	CREW3607
Ex-Engine/Module	TR5134000	TSN	60452
Workscope Level	TR02	CSN	11707

Quality

Signature Date

Notification 431825589
Remarks :
HOLD-RTN AS IS-ACTION IAW RR TC SO

Dest ZSUS01 Sect LPTR04

Requested By

User ID	Name	Date / Time
4603937		2 Sep 2019 3.22
Printed By		2 Sep 2019 22:03.25
4603937		

Customer

Signature Date

UNSERVICEABLE

EquipmentNo
209770642

Item Ref
TRF011108-725231-01-800 .DISC ROTOR-LP TURBINE STAGE 5

Inspection Stamp
02 SEP 2019

Eng Mark	TRH0892	Part No	FK24200
Customer Code	HRNCT		DISC,
WBS Element	0.001390047-HTR08_08_LV2	Serial No	CREW3591
Ex-Engine/Module	TR5134000	TSN	60452
Workscope Level	TR02		

Quantity 1

CSN 11707

Quality

Signature Date

Notification 431825640
Remarks :
HOLD-RTN AS IS-ACTION IAW RR TC SO

Dest ZSUS01 Sect LPTR05

Requested By

User ID	Name	Date / Time
4603937		2 Sep 2019 22:04.39
Printed By		
4603937		2 Sep 2019 22:04.51

Customer

Signature Date

UNSERVICEABLE

EquipmentNo
209770580

Item Ref
TRF011108-725233-01-200 .SHAFT ASSY OF LP TURBINE

Inspection Stamp
02 SEP 20..

Eng Mark TRH0892
Customer Code HRNCT
WBS Element 0.001390047-HTR08_08_LV2
Ex-Engine/Module TR5134000
Workscope Level TR02

Part No FK26159
SHAFT,ASSY OF
Quantity 1
Serial No BBAP793
TSN 60452
CSN 11707

Quality
Signature Date

Notification 431825641
Remarks :
HOLD-RTN AS IS-ACTION IAW RR TC SO

Dest ZSUS01
Sect LPTR

Requested By
User ID 4603937
Name
Date / Time 2 Sep 2019 22:05.26

Printed By
4603937
2 Sep 2019 22:05.29

Customer
Signature Date