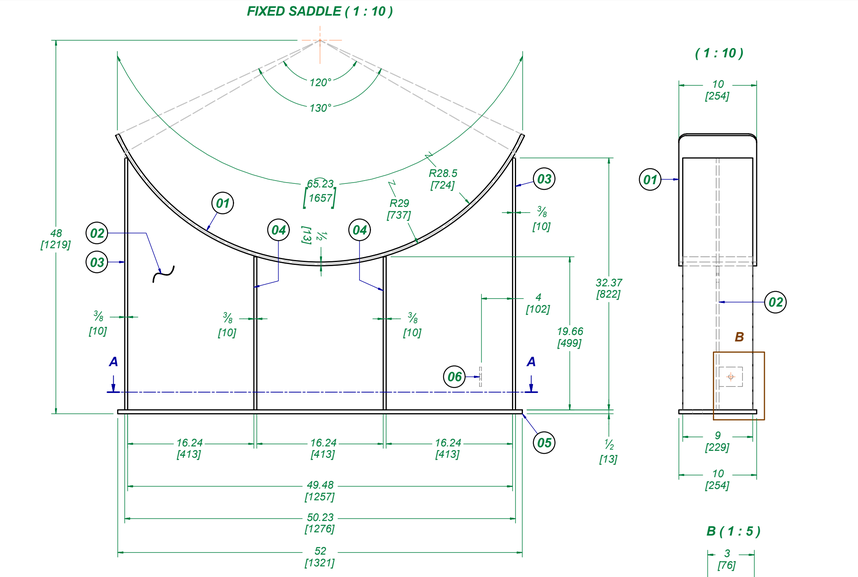

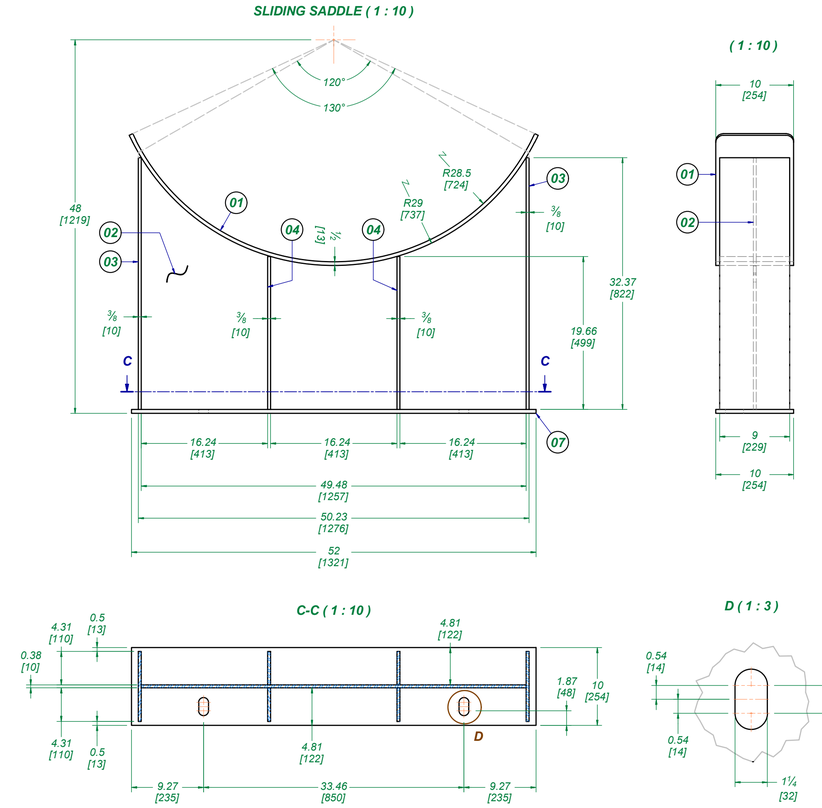

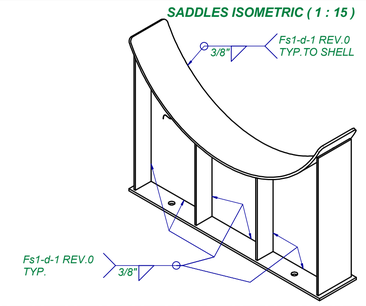

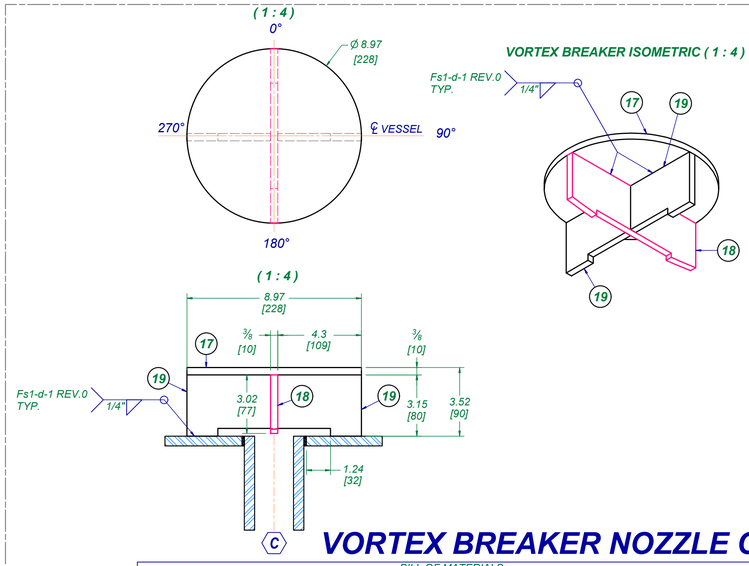

SADDLES

VORTEX BREAKER NOZZLE C

BILL OF MATERIALS								
No	ITEM	QTY	DESCRIPTION	THK	LENGTH	WIDTH	MATERIAL	WEIGHT
01	WEAR PLATE	1	Plate	1/2"	1657 mm	254 mm	SA-516 Gr 70	42 kg
02	WEB PLATE	1	Plate	3/8"	1257 mm	822 mm	SA-516 Gr 70	54 kg
03	OUTSIDE STIFFENER	2	Plate	3/8"	822 mm	229 mm	SA-516 Gr 70	28.2 kg
04	INSIDE STIFFENER	4	Plate	3/8"	499 mm	110 mm	SA-516 Gr 70	16.4 kg
05	BASE PLATE FIXED	1	Plate	1/2"	1321 mm	254 mm	SA-516 Gr 70	33.4 kg
06	EARTH LUG	1	Plate	6 mm	76 mm	64 mm	Stainless Steel	0.2 kg
07	BASE PLATE SLIDING	1	Plate	1/2"	1321 mm	254 mm	SA-516 Gr 70	33.2 kg

BILL OF MATERIALS								
No	ITEM	QTY	DESCRIPTION	THK	LENGTH	WIDTH	MATERIAL	WEIGHT
17	TOP N3	1	Plate	3/8"	228 mm	228 mm	SA-516 Gr 70	3 kg
18	LEG A N3	1	Plate	3/8"	228 mm	77 mm	SA-516 Gr 70	1.2 kg
19	LEG B N3	2	Plate	3/8"	109 mm	80 mm	SA-516 Gr 70	1.2 kg

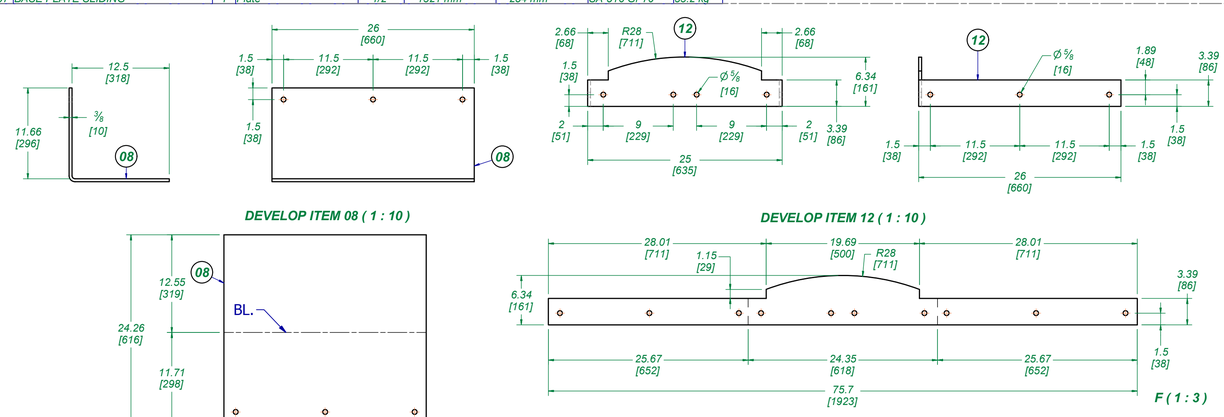

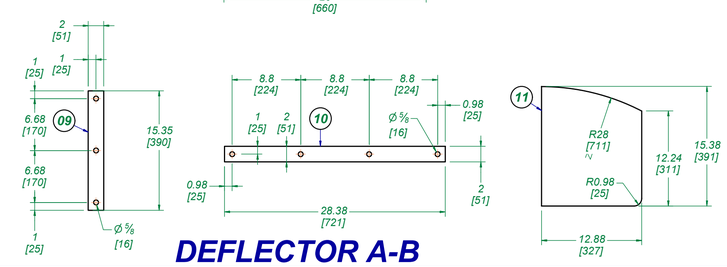

DEFLECTOR A-B

BILL OF MATERIALS								
No	ITEM	QTY	DESCRIPTION	THK	LENGTH	WIDTH	MATERIAL	WEIGHT
08	INTERNAL BAFFLE A	2	Plate	3/8"	660 mm	616 mm	SA-516 Gr 70	61 kg
09	ANCHOR PLATE A	2	Plate	3/8"	390 mm	51 mm	SA-516 Gr 70	2.9 kg
10	ANCHOR PLATE B	2	Plate	3/8"	721 mm	51 mm	SA-516 Gr 70	5.4 kg
11	COVER	2	Plate	3/8"	391 mm	327 mm	SA-516 Gr 70	17.9 kg
12	ANCHOR PLATE C	1	Plate	3/8"	161 mm	1923 mm	SA-516 Gr 70	14.5 kg
13	BOLT	17	Machine Bolt, Hex Head Ø 1/2", UNC	*****	2"	*****	Stainless Steel	1.2 kg
14	NUT	17	Nuts , Hex Head Ø 1/2" UNC	*****	*****	*****	Stainless Steel	0.3 kg
15	PLASTIC WASHER	34	Washer, Ø 1/2"	3 mm	*****	*****	Nylon 6/6	0 kg
16	WASHER	34	Washer, Ø 1/2"	3 mm	*****	*****	Stainless Steel	0.3 kg

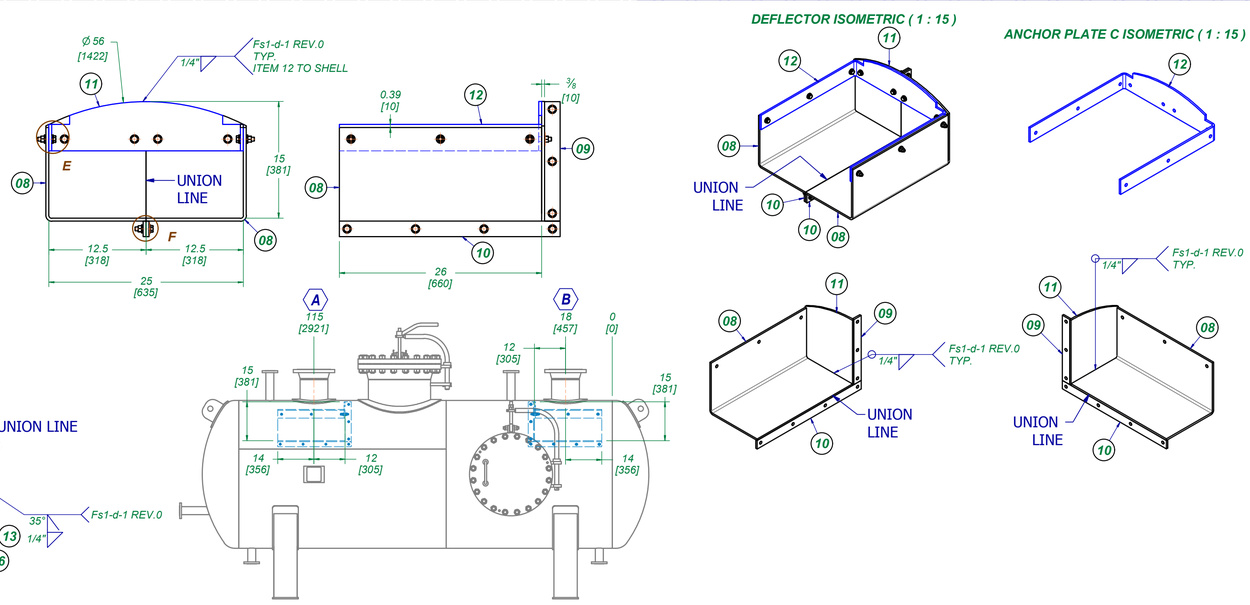

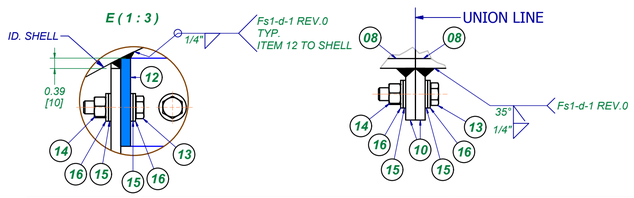

CLEANING SPECIFICATION

INSIDE: Sand Blasting To Near White Metal Grade SSPC-SPC 10, 1.5-3.0 Mils.
OUTSIDE: Sand Blasting To Near White Metal Grade SSPC-SPC 10, 1.5-3.0 Mils

PAINTING SPECIFICATION

INSIDE
Primer: Imprimante Inorganico de Cinc Sika, Greenish Gray Color 3.0-4.0 Mils D.F.T.
Barrier: Epoxifenolico Serie 45 Sika, Gray Color (Ral 7035) 9.0-10 mils D.F.T.
TOTAL: 12-14 Mils D.F.T.
OUTSIDE
Primer: Carbozinc 11 FG, Green Color (0300), Marca Carboline, 2.5 - 4.0 mils D.F.T.
Barrier: Carboguard 890, White Color(S800) 6.0-7.0 Mils D.F.T.
Finish: Carboxane 2000, Aluminum Gray Color (Ral 9006) 3.0-4.0 Mils. D.F.T.
TOTAL: 12-15 Mils D.F.T.

REFERENCE DRAWING

2. General Drawing 3774-01-15-01

CONVENTIONS

1.WL: WELDING LINE
2.TL.:TANGENT LINE
3.TYP.: TYPICAL
4.RD.:REFERENCE DRAWING
5.THK.: THICKNESS
6.C.G.:CENTER GRAVITY
7.BL: BENDING LINE
8.Drw.:DRAWING

NOTES

1. Dimensions are in inches and Millimeters in [ ]
2. Use only indicated dimensions.
3. Conversion factor : 25.400 mm/in.
4. Quantities in bill of materials for two (2) Saddles,two (2) Deflectors & one (1) Vortex Breaker,two (2) Saddles,two (2) Deflectors & one (1) Vortex Breaker are required.
5. Pads with hole ø1/4" for degassing.

No.	DATE	BY	CHK'D	DESCRIPTION
A	28/11/14	FP.	DER.	ISSUED FOR APPROVAL

REVISION HISTORY

THE DESIGNS ARE PROPERTY OF INDUTANPAS LTDA AND SHALL NOT BE USED NEITHER TOTALLY OR PARTIALLY WITHOUT WRITTEN AUTHORIZATION OF INDUTANPAS LTDA

APPROVED BY:
ENGINEERING MANAGER
REVIEWED BY
QUALITY CONTROL MANAGER

O.T. 3774

EQUIPMENT: TAMBOR DE AMORTIGUACION
56" ID. X 144" WL-WL
TAG: T-D-20-5-02
ESTACION DE COMPRESION TIBU, TIBU NORTE DE SANTANDER, COLOMBIA

CONTENT: DETAILS DRAWING

SCALE	DRAWING No.	REV
See drw.	3774-01-15-02	A

C:\WP\4-ORDENES DE TRABAJO\PLANOS\3774-02.dw